Features

- **Single Package Fully-integrated 4-bit Microcontroller with RF Transmitter**
- **Low Power Consumption in Sleep Mode (< 1 µA Typically)**
- **Flash Controller for Application Program Available**
- **Maximum Output Power (10 dBm) with Low Supply Current (9.5 mA Typically)**
- **2.0 V to 4.0 V Operation Voltage for Single Li-cell Power Supply**
- **-40°C to +125°C Operation Temperature**
- **SSO24 Package**
- **About Seven External Components**

Microcontroller with UHF ASK/FSK Transmitter

T48C862-R3

Preliminary

Description

The T48C862-R3 is a single package dual-chip circuit. It combines a UHF ASK/FSK transmitter with a 4-bit microcontroller. It supports highly integrated solutions in car access and tire pressure monitoring applications, as well as manifold applications in the industrial and consumer segment. It is available for the frequency range of 429 MHz to 439 MHz with data rates up to 32 kbaud.

For further frequency ranges such as 310 MHz to 330 MHz and 868 MHz to 928 MHz separate data sheets are available.

The device contains a flash microcontroller.

Figure 1. Application Diagram

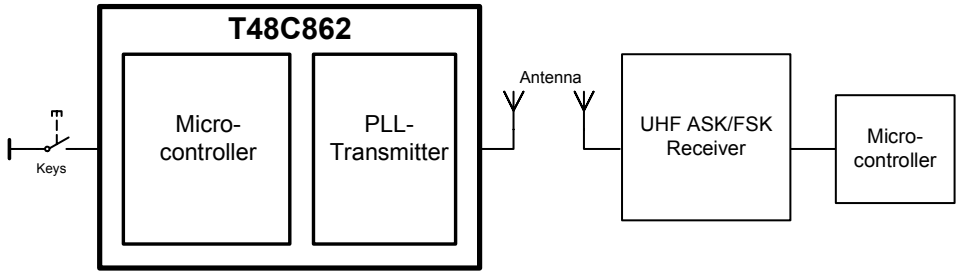

Rev. 4554A–4BMCU–02/03

Pin Configuration

Figure 2. Pinning SSO24

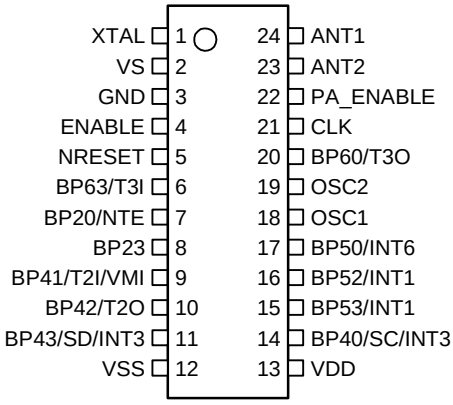

Pin Description: RF Part

Pin	Symbol	Function	Configuration
1	XTAL	Connection for crystal	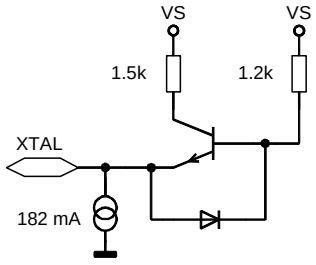
2	VS	Supply voltage	ESD protection circuitry (see Figure 8)
3	GND	Ground	ESD protection circuitry (see Figure 8)
4	ENABLE	Enable input	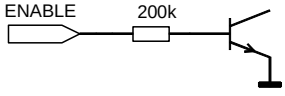

Pin Description: RF Part (Continued)

Pin	Symbol	Function	Configuration
21	CLK	Clock output signal for microcontroller The clock output frequency is set by the crystal to $f_{XTAL}/4$.	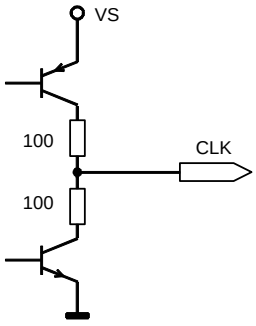
22	PA_ENABLE	Switches on power amplifier, used for ASK modulation	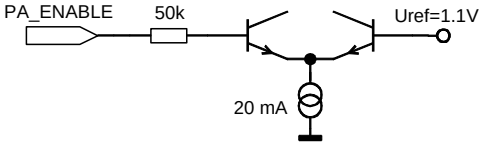
23 24	ANT2 ANT1	Emitter of antenna output stage Open collector antenna output	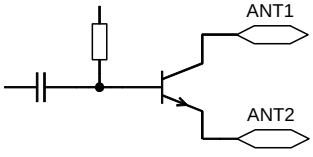

Pin Description: Microcontroller Part

Name	Type	Function	Alternate Function	Pin No.	Reset State
V_{DD}	–	Supply voltage	–	13	NA
V_{SS}	–	Circuit ground	–	12	NA
BP20	I/O	Bi-directional I/O line of Port 2.0	NTE-test mode enable, see also section "Master Reset"	7	Input
BP40	I/O	Bi-directional I/O line of Port 4.0	SC-serial clock or INT3 external interrupt input	14	Input
BP41	I/O	Bi-directional I/O line of Port 4.1	VMI voltage monitor input or T2I external clock input Timer 2	9	Input
BP42	I/O	Bi-directional I/O line of Port 4.2	T2O Timer 2 output	10	Input
BP43	I/O	Bi-directional I/O line of Port 4.3	SD serial data I/O or INT3-external interrupt input	11	Input
BP50	I/O	Bi-directional I/O line of Port 5.0	INT6 external interrupt input	17	Input
BP52	I/O	Bi-directional I/O line of Port 5.2	INT1 external interrupt input	16	Input
BP53	I/O	Bi-directional I/O line of Port 5.3	INT1 external interrupt input	15	Input
BP60	I/O	Bi-directional I/O line of Port 6.0	T3O Timer 3 output	20	Input
BP63	I/O	Bi-directional I/O line of Port 6.3	T3I Timer 3 input	6	Input
OSC1	I	Oscillator input	4-MHz crystal input or 32-kHz crystal input or external clock input or external trimming resistor input	18	Input
OSC2	O	Oscillator output	4-MHz crystal output or 32-kHz crystal output or external clock input	19	Input
NRESET	I/O	Bi-directional reset pin	–	5	I/O

UHF ASK/FSK Transmitter Block

Features

- **Integrated PLL Loop Filter**
- **ESD Protection (4 kV HBM/200 V MM, Except Pin 2: 4 kV HBM/100 V MM) also at ANT1/ANT2**
- **High Output Power (8 dBm) with Low Supply Current (9.0 mA)**
- **Modulation Scheme ASK/FSK**
  - **FSK Modulation is Achieved by Connecting an Additional Capacitor between the XTAL Load Capacitor and the Open-drain Output of the Modulating Microcontroller**
- **Easy to Design-in Due to Excellent Isolation of the PLL from the PA and Power Supply**
- **Single Li-cell for Power Supply**
- **Supply Voltage 2.0 V to 4.0 V in the Temperature Range of -40°C to +85°C/+125°C**
- **Single-ended Antenna Output with High Efficient Power Amplifier**
- **CLK Output for Clocking the Microcontroller**
- **One-chip Solution with Minimum External Circuitry**
- **125°C Operation for Tire Pressure Systems**

Description

The PLL transmitter block has been developed for the demands of RF low-cost transmission systems, at data rates up to 32 kbaud. The transmitting frequency range is 310 MHz to 330 MHz. It can be used in both FSK and ASK systems.

Figure 3. Block Diagram

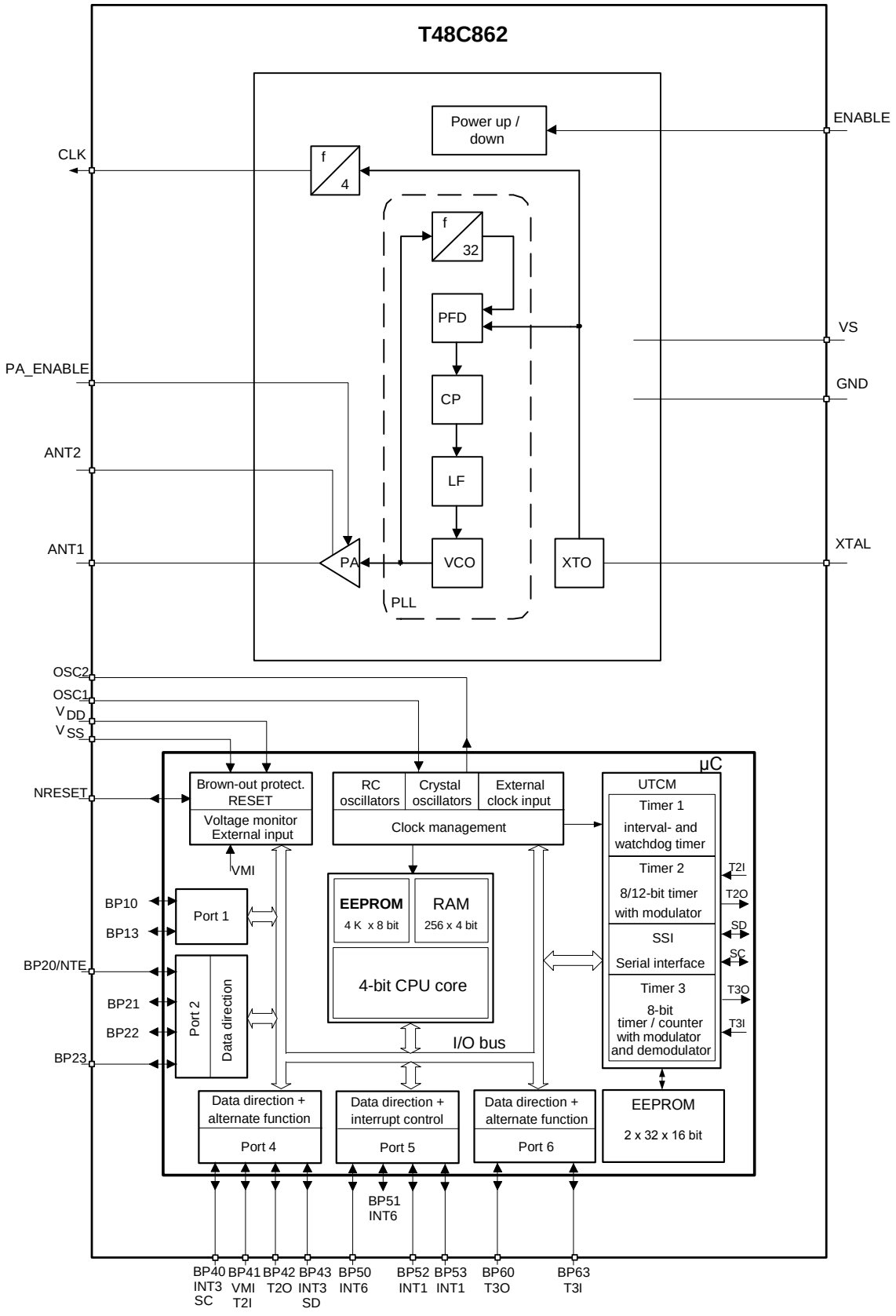

General Description

This fully-integrated PLL transmitter that allows particularly simple, low-cost RF miniature transmitters to be assembled. The VCO is locked to 32 f_{XTAL}, thus, a 9.8438 MHz crystal is needed for a 315 MHz transmitter. All other PLL and VCO peripheral elements are integrated.

The XTO is a series resonance oscillator so that only one capacitor together with a crystal connected in series to GND are needed as external elements.

The crystal oscillator together with the PLL needs maximum <1 ms until the PLL is locked and the CLK output is stable. A wait time of ≥ 1 ms until the CLK is used for the microcontroller and the PA is switched on.

The power amplifier is an open-collector output delivering a current pulse which is nearly independent from the load impedance. The delivered output power is controlled via the connected load impedance.

This output configuration enables a simple matching to any kind of antenna or to 50 Ω. A high power efficiency of $\eta = P_{out}/(I_{S,PA}\ V_S)$ of 40% for the power amplifier results when an optimized load impedance of Z_{Load} = (255 + j192) Ω is used at 3 V supply voltage.

Functional Description

If ENABLE = L and PA_ENABLE = L, the circuit is in standby mode consuming only a very small amount of current so that a lithium cell used as power supply can work for several years.

With ENABLE = H, the XTO, PLL and the CLK driver are switched on. If PA_ENABLE remains L, only the PLL and the XTO are running and the CLK signal is delivered to the microcontroller. The VCO locks to 32 times the XTO frequency.

With ENABLE = H and PA_ENABLE = H, the PLL, XTO, CLK driver and the power amplifier are on. With PA_ENABLE, the power amplifier can be switched on and off, which is used to perform the ASK modulation.

ASK Transmission

The PLL transmitter block is activated by ENABLE = H. PA_ENABLE must remain L for t ≥ 1 ms, then the CLK signal can be taken to clock the microcontroller and the output power can be modulated by means of pin PA_ENABLE. After transmission, PA_ENABLE is switched to L and the microcontroller switches back to internal clocking. The PLL transmitter block is switched back to standby mode with ENABLE = L.

FSK Transmission

The PLL transmitter block is activated by ENABLE = H. PA_ENABLE must remain L for t ≥ 1 ms, then the CLK signal can be taken to clock the microcontroller and the power amplifier is switched on with PA_ENABLE = H. The chip is then ready for FSK modulation. The microcontroller starts to switch on and off the capacitor between the XTAL load capacitor and GND with an open-drain output port, thus changing the reference frequency of the PLL. If the switch is closed, the output frequency is lower than if the switch is open. After transmission PA_ENABLE is switched to L and the microcontroller switches back to internal clocking. The PLL transmitter block is switched back to standby mode with ENABLE = L.

The accuracy of the frequency deviation with XTAL pulling method is about ±25% when the following tolerances are considered.

Figure 4. Tolerances of Frequency Modulation

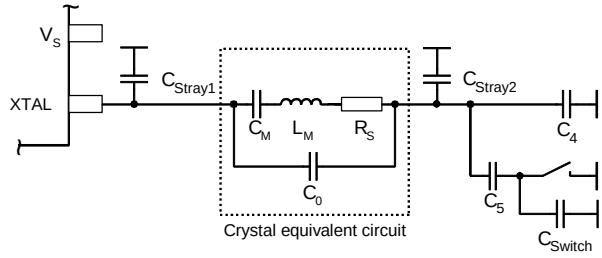

Using C_4 = 8.2 pF ±5%, C_5 = 10 pF ±5%, a switch port with C_{Switch} = 3 pF ±10%, stray capacitances on each side of the crystal of C_{Stray1} = C_{Stray2} = 1 pF ±10%, a parallel capacitance of the crystal of C_0 = 3.2 pF ±10% and a crystal with C_M = 13 fF ±10%, an FSK deviation of ±21.5 kHz typical with worst case tolerances of ±16.25 kHz to ±28.01 kHz results.

CLK Output

An output CLK signal is provided for a connected microcontroller, the delivered signal is CMOS compatible if the load capacitance is lower than 10 pF.

Clock Pulse Take Over

The clock of the crystal oscillator can be used for clocking the microcontroller. Atmel's M4xCx9x has the special feature of starting with an integrated RC-oscillator to switch on the PLL transmitter block with ENABLE = H, and after 1 ms to assume the clock signal of the transmission IC, so the message can be sent with crystal accuracy.

Output Matching and Power Setting

The output power is set by the load impedance of the antenna. The maximum output power is achieved with a load impedance of $Z_{Load,opt}$ = (255 + j192) Ω. There must be a low resistive path to V_S to deliver the DC current.

The delivered current pulse of the power amplifier is 9 mA and the maximum output power is delivered to a resistive load of 400 Ω if the 1.0 pF output capacitance of the power amplifier is compensated by the load impedance.

An optimum load impedance of:
Z_{Load} = 400 Ω || j/(2 × π 1.0 pF) = (255 + j192) Ω thus results for the maximum output power of 8 dBm.

The load impedance is defined as the impedance seen from the PLL transmitter block's ANT1, ANT2 into the matching network. Do not confuse this large signal load impedance with a small signal input impedance delivered as input characteristic of RF amplifiers and measured from the application into the IC instead of from the IC into the application for a power amplifier.

Less output power is achieved by lowering the real parallel part of 400 Ω where the parallel imaginary part should be kept constant.

Output power measurement can be done with the circuit shown in Figure 5. Note that the component values must be changed to compensate the individual board parasitics until the PLL transmitter block has the right load impedance $Z_{Load,opt}$ = (255 + j192) Ω. Also the damping of the cable used to measure the output power must be calibrated.

Figure 5. Output Power Measurement

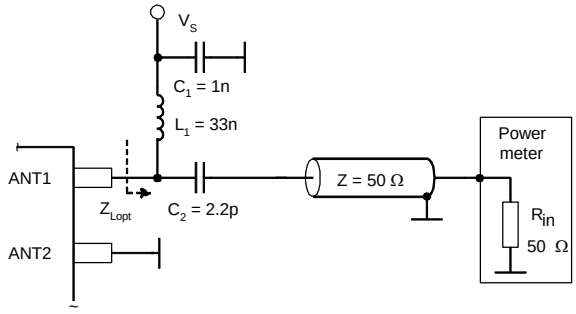

Application Circuit

For the supply-voltage blocking capacitor C_3, a value of 68 nF/X7R is recommended (see Figure 6 and Figure 7). C_1 and C_2 are used to match the loop antenna to the power amplifier where C_1 typically is 22 pF/NP0 and C_2 is 10.8 pF/NP0 (18 pF + 27 pF in series); for C_2 two capacitors in series should be used to achieve a better tolerance value and to have the possibility to realize the $Z_{Load,opt}$ by using standard valued capacitors.

C_1 forms together with the pins of PLL transmitter block and the PCB board wires a series resonance loop that suppresses the 1st harmonic, thus, the position of C_1 on the PCB is important. Normally the best suppression is achieved when C_1 is placed as close as possible to the pins ANT1 and ANT2.

The loop antenna should not exceed a width of 1.5 mm, otherwise the Q-factor of the loop antenna is too high.

L_1 (50 nH to 100 nH) can be printed on PCB. C_4 should be selected so the XTO runs on the load resonance frequency of the crystal. Normally, a value of 12 pF results for a 15 pF load-capacitance crystal.

Figure 6. ASK Application Circuit

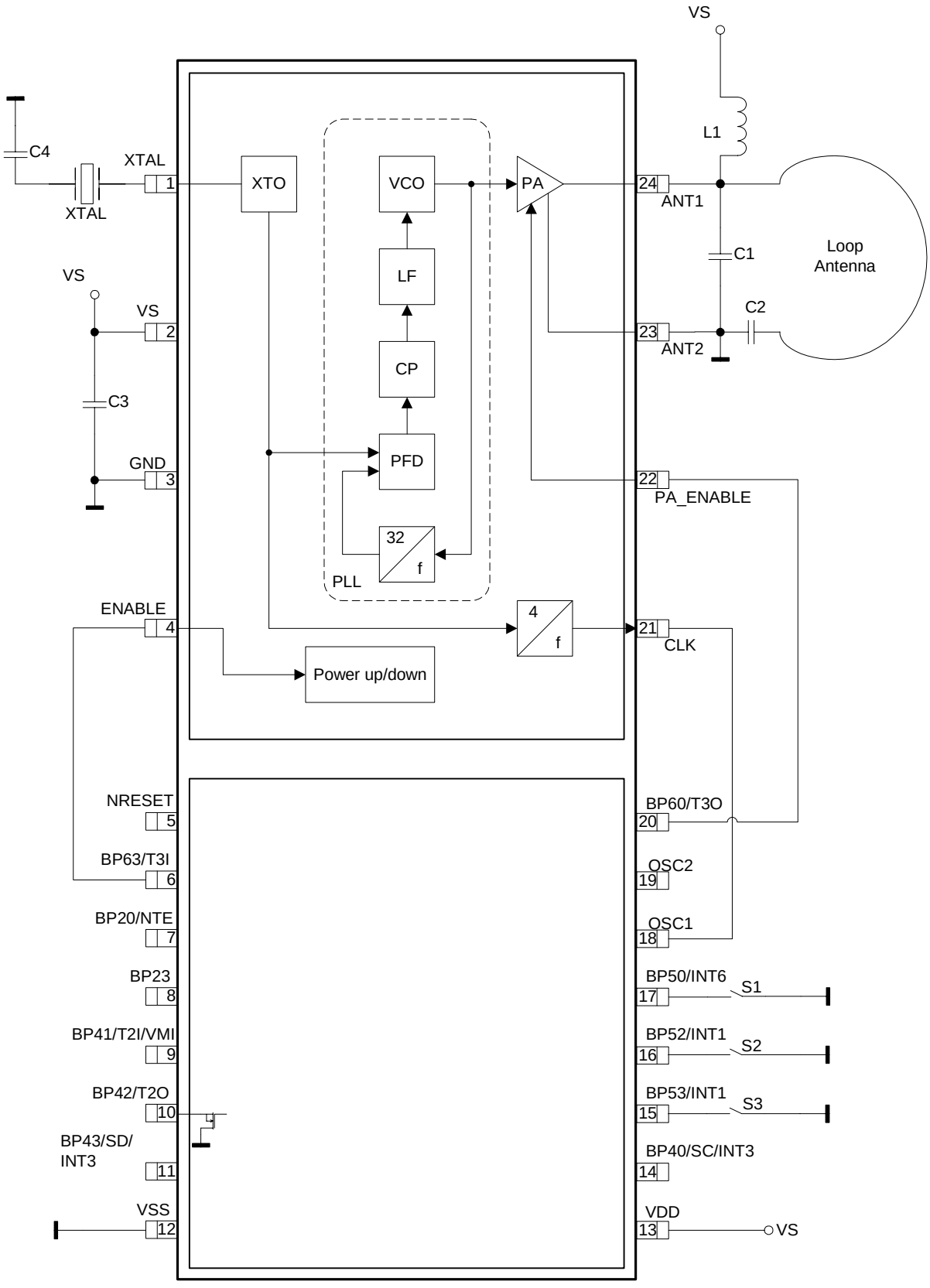

Figure 7. FSK Application Circuit

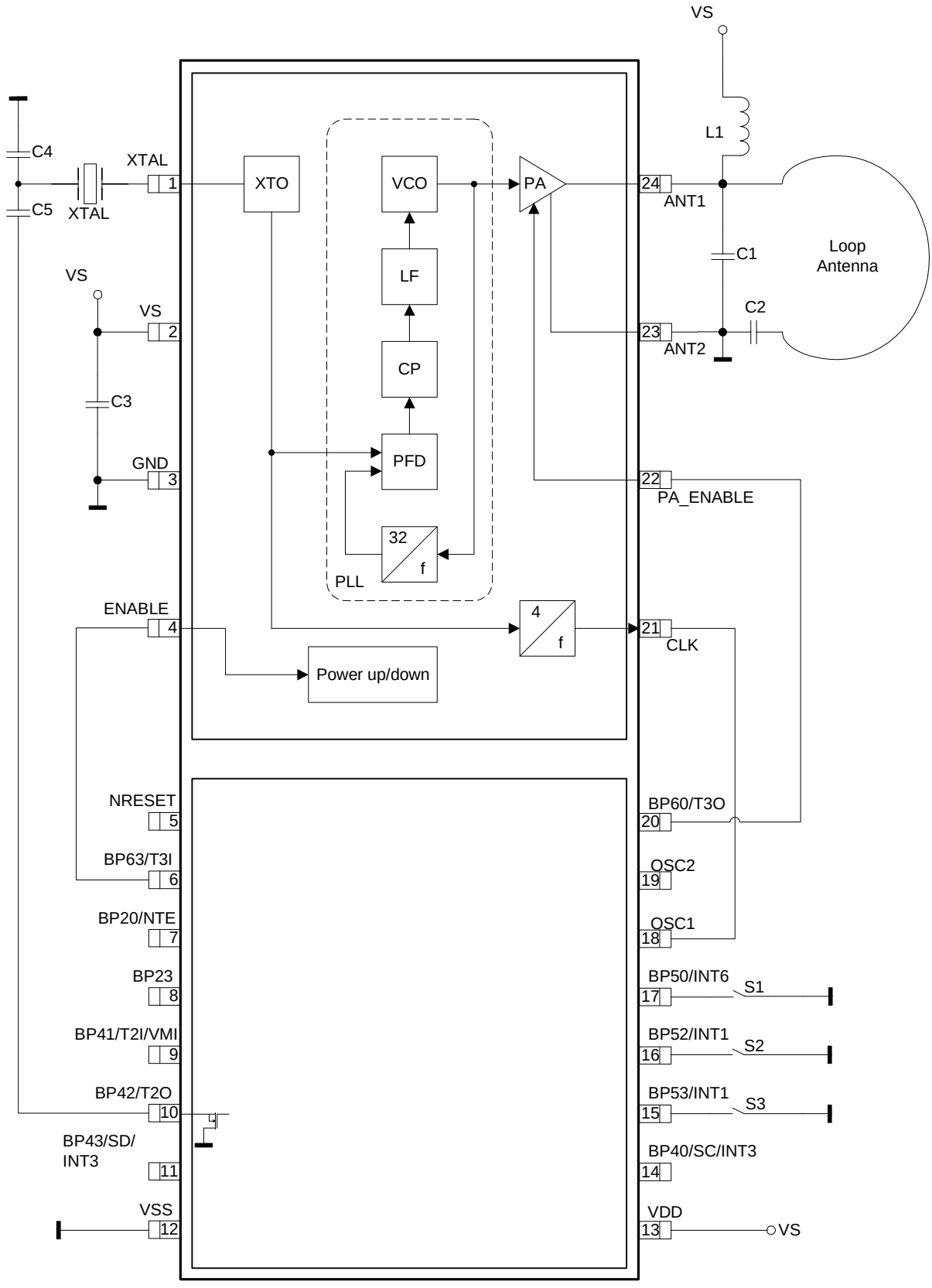

Figure 8. ESD Protection Circuit

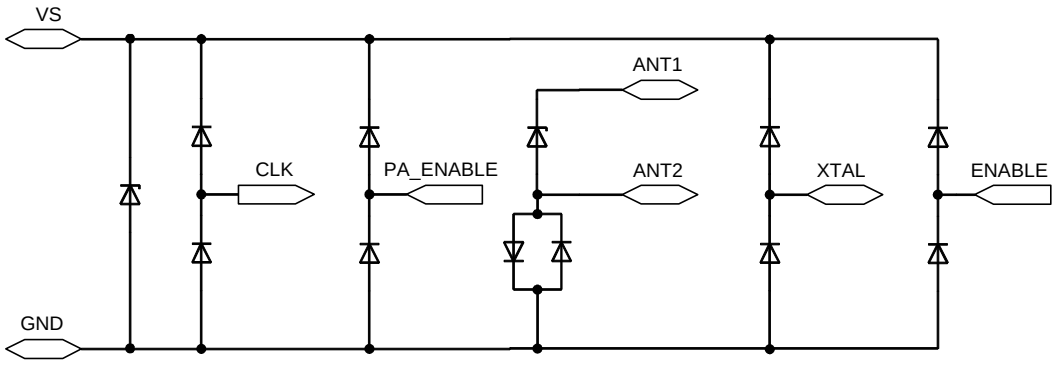

Absolute Maximum Ratings

Parameters	Symbol	Min.	Max.	Unit
Supply voltage	V_S		5	V
Power dissipation	P_{tot}		100	mW
Junction temperature	T_j		150	°C
Storage temperature	T_{stg}	-55	+125	°C
Ambient temperature	T_{amb}	-55	+125	°C

Thermal Resistance

Parameters	Symbol	Value	Unit
Junction ambient	R_{thJA}	170	K/W

Electrical Characteristics

V_S = 2.0 V to 4.0 V, T_{amb} = -40°C to +125°C, unless otherwise specified.
Typical values are given at V_S = 3.0 V and T_{amb} = 25°C. All parameters are referred to GND (Pin 7).

Parameters	Test Conditions	Symbol	Min.	Typ.	Max.	Unit
Supply current	Power down, V_{ENABLE} < 0.25 V, -40°C to +85°C $V_{PA\text{-}ENABLE}$ < 0.25 V, -85°C to +125°C $V_{PA\text{-}ENABLE}$ < 0.25 V, 25°C (100% correlation tested)	I_{S_Off}		 <10	350 7 	nA µA nA
Supply current	Power up, PA off, V_S = 3 V V_{ENABLE} > 1.7 V, $V_{PA\text{-}ENABLE}$ < 0.25 V	I_S		3.7	4.8	mA
Supply current	Power up, V_S = 3.0 V V_{ENABLE} > 1.7 V, $V_{PA\text{-}ENABLE}$ > 1.7 V	$I_{S_Transmit}$		9	11.6	mA
Output power	V_S = 3.0 V, T_{amb} = 25°C f = 315 MHz, Z_{Load} = (255 + j192) Ω	P_{Ref}	6.0	8.0	10.5	dBm

Electrical Characteristics (Continued)

V_S = 2.0 V to 4.0 V, T_{amb} = -40°C to +125°C, unless otherwise specified.
Typical values are given at V_S = 3.0 V and T_{amb} = 25°C. All parameters are referred to GND (Pin 7).

Parameters	Test Conditions	Symbol	Min.	Typ.	Max.	Unit
Output power variation for the full temperature range	T_{amb} = -40°C to +85°C V_S = 3.0 V V_S = 2.0 V	 ΔP_{Ref} ΔP_{Ref}			 -1.5 -4.0	 dB dB
Output power variation for the full temperature range	T_{amb} = -40°C to +125°C V_S = 3.0 V V_S = 2.0 V $P_{Out} = P_{Ref} + \Delta P_{Ref}$	 ΔP_{Ref} ΔP_{Ref}			 -2.0 -4.5	 dB dB
Achievable output-power range	Selectable by load impedance	P_{Out_typ}	0		8.0	dBm
Spurious emission	$f_{CLK} = f_0/128$ Load capacitance at Pin CLK = 10 pF $f_O \pm 1\times f_{CLK}$ $f_O \pm 4 \times f_{CLK}$ other spurious are lower			 -55 -52		 dBc dBc
Oscillator frequency XTO (= phase comparator frequency)	$f_{XTO} = f_0/32$ f_{XTAL} = resonant frequency of the XTAL, $C_M \leq 10$ fF, load capacitance selected accordingly T_{amb} = -40°C to +85°C T_{amb} = -40°C to +125°C	f_{XTO}	 -30 -40	 f_{XTAL}	 +30 +40	 ppm ppm
PLL loop bandwidth				250		kHz
Phase noise of phase comparator	Referred to $f_{PC} = f_{XT0,}$ 25 kHz distance to carrier			-116	-110	dBc/Hz
In loop phase noise PLL	25 kHz distance to carrier			-86	-80	dBc/Hz
Phase noise VCO	at 1 MHz at 36 MHz			-94 -125	-90 -121	dBc/Hz dBc/Hz
Frequency range of VCO		f_{VCO}	310		330	MHz
Clock output frequency (CMOS microcontroller compatible)				$f_0/128$		MHz
Voltage swing at Pin CLK	$C_{Load} \leq 10$ pF	V_{0h} V_{0l}	$V_S \times 0.8$		 $V_S \times 0.2$	V V
Series resonance R of the crystal		Rs			110	Ω
Capacitive load at Pin XT0					7	pF
FSK modulation frequency rate	Duty cycle of the modulation signal = 50%		0		32	kHz
ASK modulation frequency rate	Duty cycle of the modulation signal = 50%		0		32	kHz
ENABLE input	Low level input voltage High level input voltage Input current high	V_{Il} V_{Ih} I_{In}	 1.7		0.25 20	V V µA
PA_ENABLE input	Low level input voltage High level input voltage Input current high	V_{Il} V_{Ih} I_{In}	 1.7		0.25 5	V V µA

Microcontroller Block

Features

- 4-Kbyte ROM, 256 x 4-bit RAM
- EEPROM Programmable Options
- Read Protection for the EEPROM Program Memory
- 16 Bi-directional I/Os
- Up to Seven External/Internal Interrupt Sources
- Eight Hardware and Software Interrupt Priorities
- Multifunction Timer/Counter
  - IR Remote Control Carrier Generator
  - Biphase-, Manchester- and Pulse-width Modulator and Demodulator
  - Phase Control Function
- Programmable System Clock with Prescaler and Five Different Clock Sources
- Very Low Sleep Current (< 1 µA)
- 2 × 512-bBit EEPROM Data Memory
- 256 × 4-bit RAM Data Memory
- Synchronous Serial Interface (2-wire, 3-wire)
- Watchdog, POR and Brown-out Function
- Voltage Monitoring Inclusive Lo_BAT Detect

Description

The microcontroller is designed with EEPROM cells so it can be programmed several times. To offer full compatibility with each ROM version, the I/O configuration is stored into a separate internal EEPROM block during programming. The configuration is downloaded to the I/Os with every power-on reset.

Introduction

The microcontroller block is a member of Atmel's family of 4-bit single-chip microcontrollers. Instead of ROM it contains EEPROM, RAM, parallel I/O ports, two 8-bit programmable multifunction timer/counters, voltage supervisor, interval timer with watchdog function and a sophisticated on-chip clock generation with integrated RC-, 32-kHz and 4-MHz crystal oscillators.

Differences between T48C862-R3 and ATAR862 Microcontrollers

Program Memory

The program memory of the devices is realized as an EEPROM. The memory size for user programs is 4096 bytes. It is programmed as 258 × 16 bytes blocks of data. the implement LOCK-bit function is user-selectable and protects the device from unauthorized read-out of the program memory.

Configuration Memory

An additional area of 32 bytes of the EEPROM is used to store information about the hardware configuration. All the options that are selectable for the ROM versions are available to the user. This includes not only the different port options but also the possibilities to select different capacitors for OSC1 and OSC2, the option to enable or disable the hardlock for the watchdog, the option to select OSC2 instead of OSC1 as external clock input and the option to enable the external clock monitor as a reset source.

Data Memory

The microcontroller block contains an internal data EEPROM that is organized as two pages of 32 × 16-bit. To be compatible with the ROM parts, the page used has to be defined within the application software by writing the 2-wire interface (TWI) command "09h" to the EEPROM. This command has no effect for the microcontroller block, if it is left inside the HEX-file for the ROM version. Also for compatibility reasons, the access to the EEPROM is handled via the MCL (serial interface) as in the corresponding ROM parts.

Reset Function

During each reset (power-on or brown-out), the I/O configuration is deleted and reloaded with the data from the configuration memory. This leads to a slightly different behavior compared to the ROM versions. Both devices switch their I/Os to input during reset but the ROM part has the mask selected pull-up or pull-down resistors active while the MTP has them removed until the download is finished.

Microcontroller Architecture General Description

The microcontroller consists of an advanced stack-based, 4-bit CPU core and on-chip peripherals. The CPU is based on the Harvard architecture with physically separated program memory (ROM) and data memory (RAM). Three independent buses, the instruction bus, the memory bus and the I/O bus, are used for parallel communication between ROM, RAM and peripherals. This enhances program execution speed by allowing both instruction prefetching, and a simultaneous communication to the on-chip peripheral circuitry. The extremely powerful integrated interrupt controller with associated eight prioritized interrupt levels supports fast and efficient processing of hardware events. The microcontroller is designed for the high-level programming language qFORTH. The core includes both an expression and a return stack. This architecture enables high-level language programming without any loss of efficiency or code density.

Figure 9. Microcontroller Core

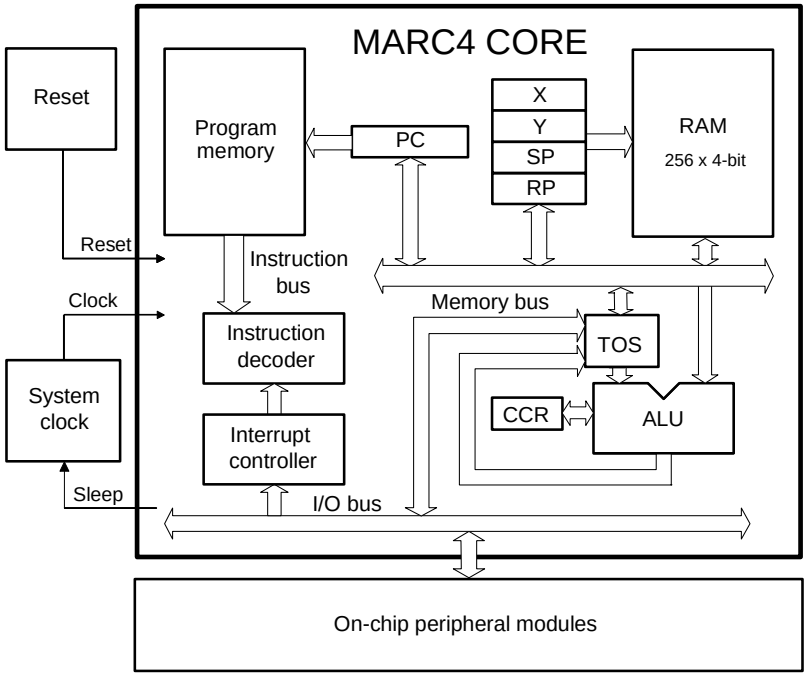

Components of Microcontroller Core

The core contains ROM, RAM, ALU, program counter, RAM address registers, instruction decoder and interrupt controller. The following sections describe each functional block in more detail.

Program Memory

The program memory (EEPROM) is programmable with the customer application program during the fabrication of the microcontroller. The EEPROM is addressed by a 12-bit wide program counter, thus predefining a maximum program bank size of 4-Kbytes. The lowest user program memory address segment is taken up by a 512 bytes Zero page which contains predefined start addresses for interrupt service routines and special subroutines accessible with single byte instructions (SCALL).

The corresponding memory map is shown in Figure 4. Look-up tables of constants can also be held in ROM and are accessed via the microcontrollers' built-in table instruction.

Figure 10. ROM Map of the Microcontroller Block

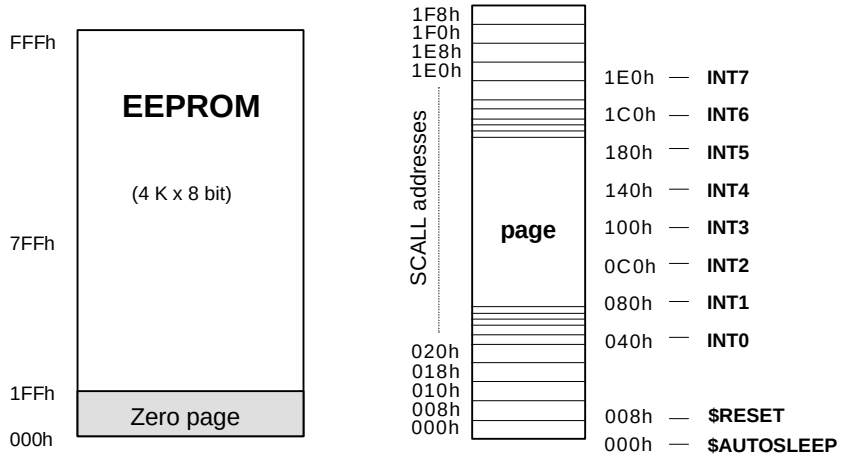

RAM

The microcontroller block contains a 256 x 4-bit wide static random access memory (RAM), which is used for the expression stack. The return stack and data memory are used for variables and arrays. The RAM is addressed by any of the four 8-bit wide RAM address registers SP, RP, X and Y.

Expression Stack

The 4-bit wide expression stack is addressed with the expression stack pointer (SP). All arithmetic, I/O and memory reference operations take their operands, and return their results to the expression stack. The microcontroller performs the operations with the top of stack items (TOS and TOS-1). The TOS register contains the top element of the expression stack and works in the same way as an accumulator. This stack is also used for passing parameters between subroutines and as a scratch pad area for temporary storage of data.

Return Stack

The 12-bit wide return stack is addressed by the return stack pointer (RP). It is used for storing return addresses of subroutines, interrupt routines and for keeping loop index counts. The return stack can also be used as a temporary storage area.

The microcontroller instruction set supports the exchange of data between the top elements of the expression stack and the return stack. The two stacks within the RAM have a user definable location and maximum depth.

Figure 11. RAM Map

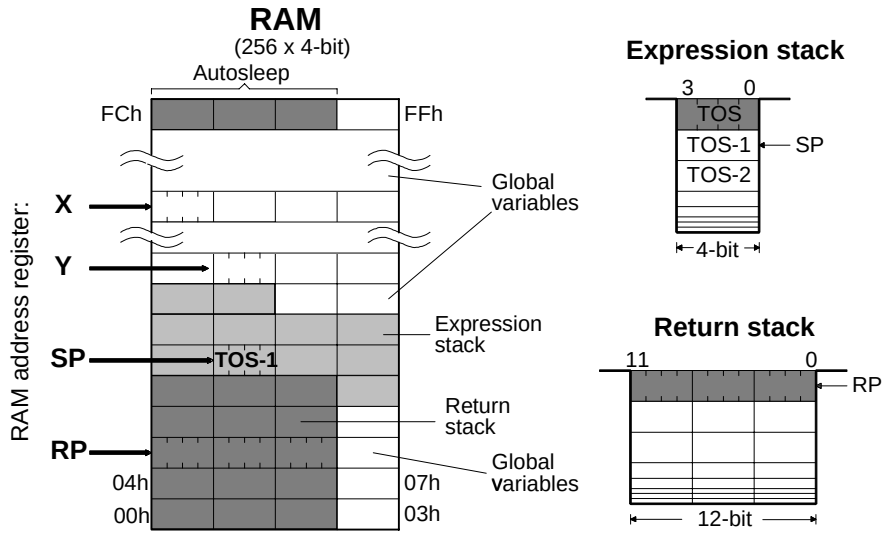

Registers

The microcontroller has seven programmable registers and one condition code register (seeFigure 12).

Program Counter (PC)

The program counter is a 12-bit register which contains the address of the next instruction to be fetched from the EEPROM. Instructions currently being executed are decoded in the instruction decoder to determine the internal micro-operations. For linear code (no calls or branches), the program counter is incremented with every instruction cycle. If a branch-, call-, return-instruction or an interrupt is executed, the program counter is loaded with a new address. The program counter is also used with the table instruction to fetch 8-bit wide EEPROM constants.

Figure 12. Programming Mode I

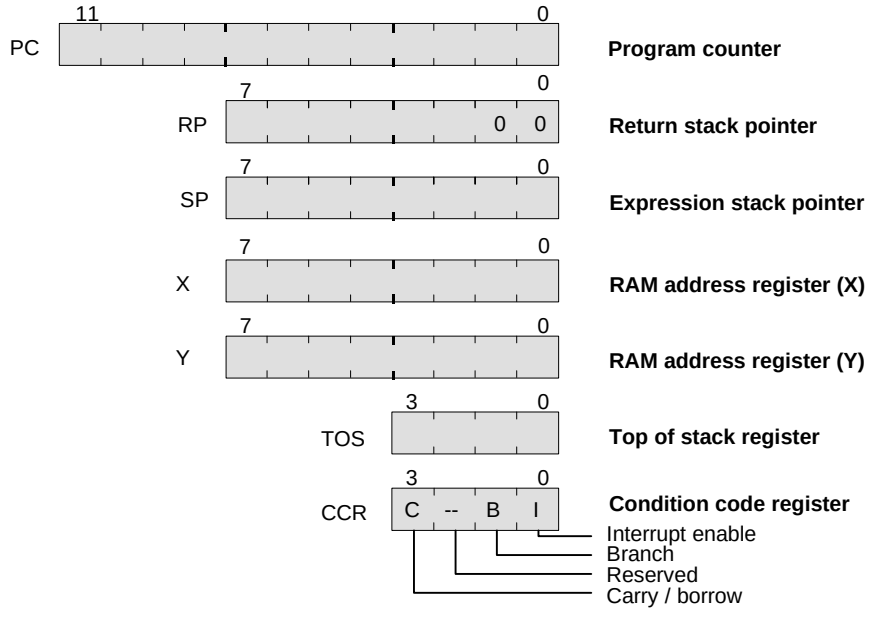

RAM Address Registers

The RAM is addressed with the four 8-bit wide RAM address registers: SP, RP, X and Y. These registers allow access to any of the 256 RAM nibbles.

Expression Stack Pointer (SP)

The stack pointer contains the address of the next-to-top 4-bit item (TOS-1) of the expression stack. The pointer is automatically pre-incremented if a nibble is moved onto the stack or post-decremented if a nibble is removed from the stack. Every post-decrement operation moves the item (TOS-1) to the TOS register before the SP is decremented. After a reset, the stack pointer has to be initialized with >SP S0 to allocate the start address of the expression stack area.

Return Stack Pointer (RP)

The return stack pointer points to the top element of the 12-bit wide return stack. The pointer automatically pre-increments if an element is moved onto the stack, or it post-decrements if an element is removed from the stack. The return stack pointer increments and decrements in steps of 4. This means that every time a 12-bit element is stacked, a 4-bit RAM location is left unwritten. This location is used by the qFORTH compiler to allocate 4-bit variables. After a reset the return stack pointer has to be initialized via >RP FCh.

RAM Address Registers (X and Y)

The X and Y registers are used to address any 4-bit item in the RAM. A fetch operation moves the addressed nibble onto the TOS. A store operation moves the TOS to the addressed RAM location. By using either the pre-increment or post-decrement addressing mode arrays in the RAM can be compared, filled or moved.

Top of Stack (TOS)

The top of stack register is the accumulator of the microcontroller block. All arithmetic/logic, memory reference and I/O operations use this register. The TOS register receives data from the ALU, EEPROM, RAM or I/O bus.

Condition Code Register (CCR)

The 4-bit wide condition code register contains the branch, the carry and the interrupt enable flag. These bits indicate the current state of the CPU. The CCR flags are set or reset by ALU operations. The instructions SET_BCF, TOG_BF, CCR! and DI allow direct manipulation of the condition code register.

Carry/Borrow (C)

The carry/borrow flag indicates that the borrowing or carrying out of arithmetic logic unit (ALU) occurred during the last arithmetic operation. During shift and rotate operations, this bit is used as a fifth bit. Boolean operations have no effect on the C-flag.

Branch (B)

The branch flag controls the conditional program branching. Should the branch flag has been set by a previous instruction, a conditional branch will cause a jump. This flag is affected by arithmetic, logic, shift, and rotate operations.

Interrupt Enable (I)

The interrupt enable flag globally enables or disables the triggering of all interrupt routines with the exception of the non-maskable reset. After a reset or while executing the DI instruction, the interrupt enable flag is reset, thus disabling all interrupts. The core will not accept any further interrupt requests until the interrupt enable flag has been set again by either executing an EI or SLEEP instruction.

ALU

The 4-bit ALU performs all the arithmetic, logical, shift and rotate operations with the top two elements of the expression stack (TOS and TOS-1) and returns the result to the TOS. The ALU operations affects the carry/borrow and branch flag in the condition code register (CCR).

Figure 13. ALU Zero-address Operations

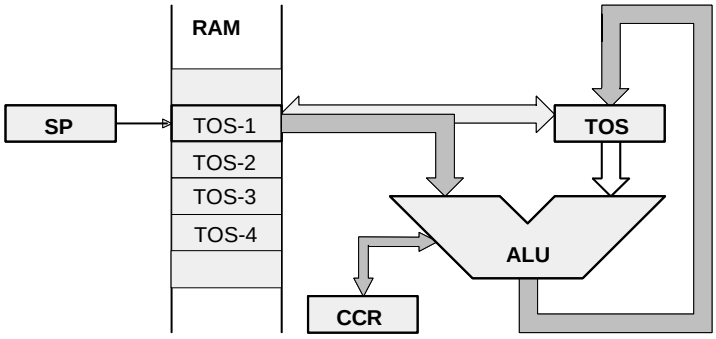

I/O Bus

The I/O ports and the registers of the peripheral modules are I/O mapped. All communication between the core and the on-chip peripherals take place via the I/O bus and the associated I/O control. With the microcontroller IN and OUT instructions, the I/O bus allows a direct read or write access to one of the 16 primary I/O addresses. More about the I/O access to the on-chip peripherals is described in the section “Peripheral Modules”. The I/O bus is internal and is not accessible by the customer on the final microcontroller device, but it is used as the interface for the microcontroller emulation (see also the section “Emulation”).

Instruction Set

The microcontroller instruction set is optimized for the high level programming language qFORTH. Many microcontroller instructions are qFORTH words. This enables the compiler to generate a fast and compact program code. The CPU has an instruction pipeline allowing the controller to prefetch an instruction from EEPROM at the same time as the present instruction is being executed. The microcontroller is a zero-address machine, the instructions contain only the operation to be performed and no source or destination address fields. The operations are implicitly performed on the data placed on the stack. There are one- and two-byte instructions which are executed within 1 to 4 machine cycles. A microcontroller machine cycle is made up of two system clock cycles (SYSCL). Most of the instructions are only one byte long and are executed in a single machine cycle. For more information refer to the “MARC4 Programmer’s Guide”.

Interrupt Structure

The microcontroller can handle interrupts with eight different priority levels. They can be generated from the internal and external interrupt sources or by a software interrupt from the CPU itself. Each interrupt level has a hard-wired priority and an associated vector for the service routine in the EEPROM (see Table 1). The programmer can postpone the processing of interrupts by resetting the interrupt enable flag (I) in the CCR. An interrupt occurrence will still be registered, but the interrupt routine only started after the I-flag is set. All interrupts can be masked, and the priority individually software configured by programming the appropriate control register of the interrupting module (see section “Peripheral Modules”).

Interrupt Processing

For processing the eight interrupt levels, the microcontroller includes an interrupt controller with two 8-bit wide interrupt pending and interrupt active registers. The interrupt controller samples all interrupt requests during every non-I/O instruction cycle and latches these in the interrupt pending register. If no higher priority interrupt is present in the interrupt active register, it signals the CPU to interrupt the current program execution. If the interrupt enable bit is set, the processor enters an interrupt acknowledge cycle. During this cycle a short call (SCALL) instruction to the service routine is executed and the current PC is saved on the return stack. An interrupt service routine is completed with the RTI instruction. This instruction resets the corresponding bits in the interrupt pending/active register and fetches the return address from the return stack to the program counter. When the interrupt enable flag is reset (triggering of interrupt routines is disabled), the execution of new interrupt service routines is inhibited but not the logging of the interrupt requests in the interrupt pending register. The execution of the interrupt is delayed until the interrupt enable flag is set again. Note that interrupts are only lost if an interrupt request occurs while the corresponding bit in the pending register is still set (i.e., the interrupt service routine is not yet finished).

It should be noted that automatic stacking of the RBR is not carried out by the hardware and so if ROM banking is used, the RBR must be stacked on the expression stack by the application program and restored before the RTI. After a master reset (power-on, brown-out or watchdog reset), the interrupt enable flag and the interrupt pending and interrupt active register are all reset.

Interrupt Latency

The interrupt latency is the time from the occurrence of the interrupt to the interrupt service routine being activated. This is extremely short (taking between 3 to 5 machine cycles depending on the state of the core).

Figure 14. Interrupt Handling

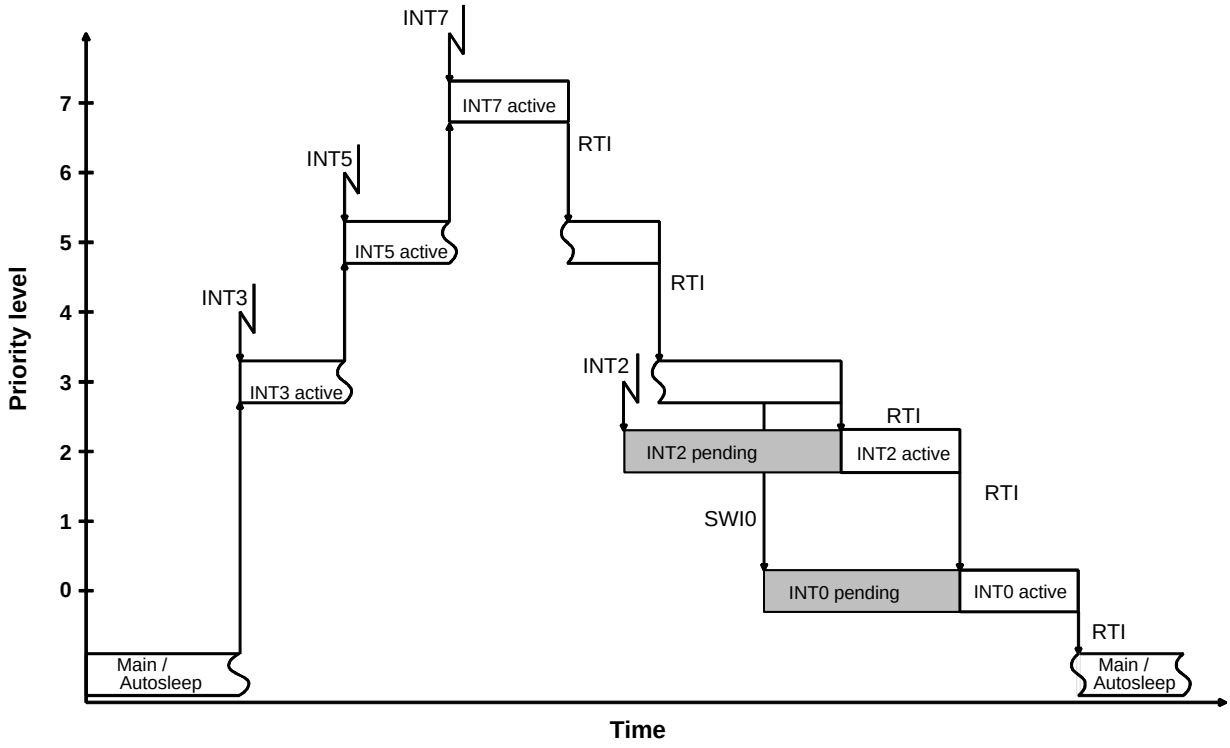

Table 1. Interrupt Priority

Interrupt	Priority	ROM Address	Interrupt Opcode	Function
INT0	Lowest	040h	C8h (SCALL 040h)	Software interrupt (SWI0)
INT1	|	080h	D0h (SCALL 080h)	External hardware interrupt, any edge at BP52 or BP53
INT2	|	0C0h	D8h (SCALL 0C0h)	Timer 1 interrupt
INT3	|	100h	E8h (SCALL 100h)	SSI interrupt or external hardware interrupt at BP40 or BP43
INT4	|	140h	E8h (SCALL 140h)	Timer 2 interrupt
INT5	|	180h	F0h (SCALL 180h)	Timer 3 interrupt
INT6	|	1C0h	F8h (SCALL 1C0h)	External hardware interrupt, at any edge at BP50 or BP51
INT7	Highest	1E0h	FCh (SCALL 1E0h)	Voltage monitor (VM) interrupt

Table 2. Hardware Interrupts

Interrupt	Interrupt Mask		Interrupt Source
	Register	Bit	
INT1	P5CR	P52M1, P52M2 P53M1, P53M2	Any edge at BP52 any edge at BP53
INT2	T1M	T1IM	Timer 1
INT3	SISC	SIM	SSI buffer full/empty or BP40/BP43 interrupt
INT4	T2CM	T2IM	Timer 2 compare match/overflow
INT5	T3CM1 T3CM2 T3C	T3IM1 T3IM2 T3EIM	Timer 3 compare register 1 match Timer 3 compare register 2 match Timer 3 edge event occurs (T3I)
INT6	P5CR	P50M1, P50M2 P51M1, P51M2	Any edge at BP50, any edge at BP51
INT7	VCM	VIM	External/internal voltage monitoring

Software Interrupts

The programmer can generate interrupts by using the software interrupt instruction (SWI), which is supported in qFORTH by predefined macros named SWI0...SWI7. The software triggered interrupt operates exactly like any hardware triggered interrupt. The SWI instruction takes the top two elements from the expression stack and writes the corresponding bits via the I/O bus to the interrupt pending register. Therefore, by using the SWI instruction, interrupts can be re-prioritized or lower priority processes scheduled for later execution.

Hardware Interrupts

In the microcontroller block, there are eleven hardware interrupt sources with seven different levels. Each source can be masked individually by mask bits in the corresponding control registers. An overview of the possible hardware configurations is shown in Table 3.

Master Reset

The master reset forces the CPU into a well-defined condition. It is unmaskable and is activated independent of the current program state. It can be triggered by either initial supply power-up, a short collapse of the power supply, brown-out detection circuitry, watchdog time-out, or an external input clock supervisor stage (see Figure 15). A master reset activation will reset the interrupt enable flag, the interrupt pending register and the interrupt active register. During the power-on reset phase, the I/O bus control signals are set to reset mode, thereby, initializing all on-chip peripherals. All bi-directional ports are set to input mode

Attention: During any reset phase, the BP20/NTE input is driven towards V_{DD} by an additional internal strong pull-up transistor. This pin must not be pulled down to V_{SS} during reset by any external circuitry representing a resistor of less than 150 kΩ.

Releasing the reset results in a short call instruction (opcode C1h) to the ROM address 008h. This activates the initialization routine $RESET which in turn has to initialize all necessary RAM variables, stack pointers and peripheral configuration registers (see Table 6).

Figure 15. Reset Configuration

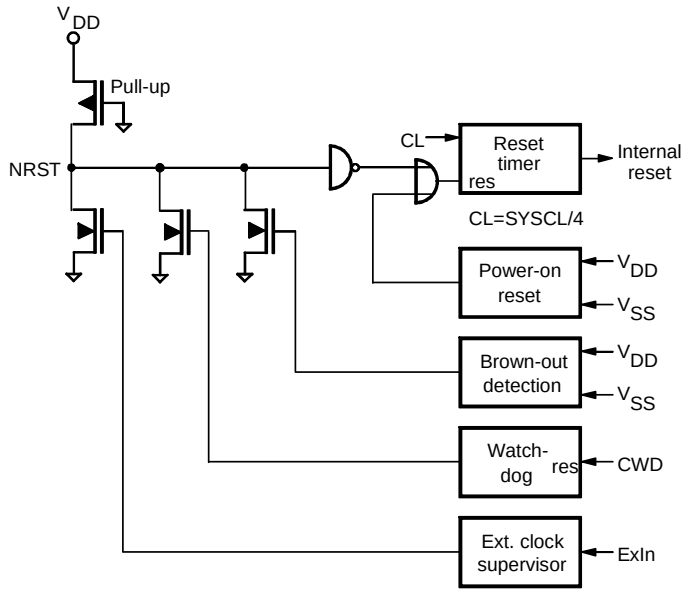

Power-on Reset and Brown-out Detection

The microcontroller block has a fully integrated power-on reset and brown-out detection circuitry. For reset generation no external components are needed.

These circuits ensure that the core is held in the reset state until the minimum operating supply voltage has been reached. A reset condition will also be generated should the supply voltage drop momentarily below the minimum operating level except when a power-down mode is activated (the core is in SLEEP mode and the peripheral clock is stopped). In this power-down mode the brown-out detection is disabled.

Two values for the brown-out voltage threshold are programmable via the BOT-bit in the SC-register.

A power-on reset pulse is generated by a V_{DD} rise across the default BOT voltage level (1.7 V). A brown-out reset pulse is generated when V_{DD} falls below the brown-out voltage threshold. Two values for the brown-out voltage threshold are programmable via the BOT-bit in the SC-register. When the controller runs in the upper supply voltage range with a high system clock frequency, the high threshold must be used. When it runs with a lower system clock frequency, the low threshold and a wider supply voltage range may be chosen. For further details, see the electrical specification and the SC-register description for BOT programming.

Figure 16. Brown-out Detection

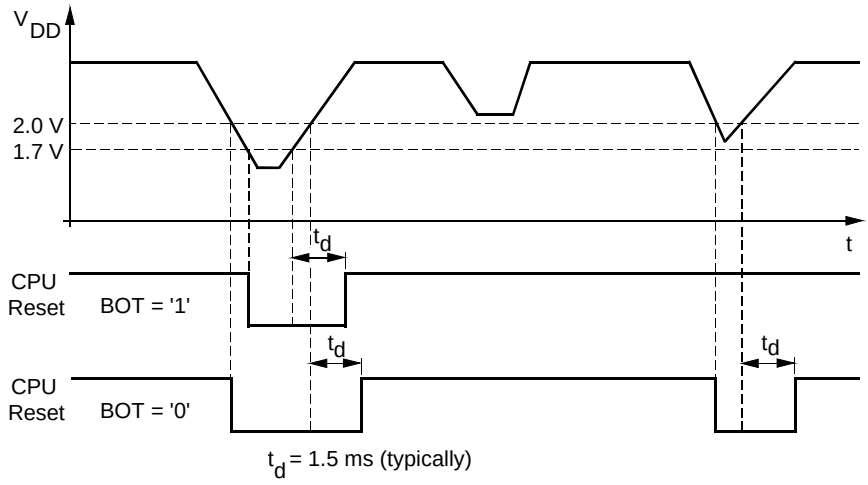

BOT = 1, low brown-out voltage threshold 1.7 V (is reset value).
BOT = 0, high brown-out voltage threshold 2.0 V.

Watchdog Reset

The watchdog's function can be enabled at the WDC-register and triggers a reset with every watchdog counter overflow. To suppress the watchdog reset, the watchdog counter must be regularly reset by reading the watchdog register address (CWD). The CPU reacts in exactly the same manner as a reset stimulus from any of the above sources.

External Clock Supervisor

The external input clock supervisor function can be enabled if the external input clock is selected within the CM- and SC-registers of the clock module. The CPU reacts in exactly the same manner as a reset stimulus from any of the above sources.

Voltage Monitor

The voltage monitor consists of a comparator with internal voltage reference. It is used to supervise the supply voltage or an external voltage at the VMI-pin. The comparator for the supply voltage has three internal programmable thresholds one lower threshold (2.2 V), one middle threshold (2.6 V) and one higher threshold (3.0 V). For external voltages at the VMI-pin, the comparator threshold is set to V_{BG} = 1.3 V. The VMS-bit indicates if the supervised voltage is below (VMS = 0) or above (VMS = 1) this threshold. An interrupt can be generated when the VMS-bit is set or reset to detect a rising or falling slope. A voltage monitor interrupt (INT7) is enabled when the interrupt mask bit (VIM) is reset in the VMC-register.

Figure 17. Voltage Monitor

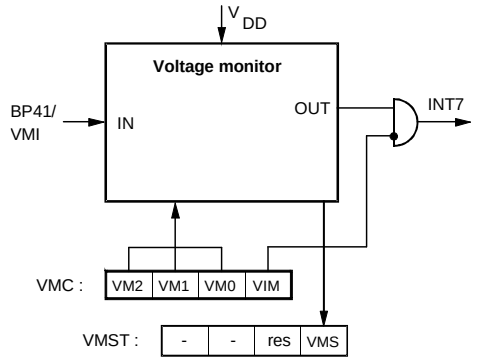

Voltage Monitor Control/Status Register

Primary register address: "F"hex

	Bit 3	Bit 2	Bit 1	Bit 0	
VMC: Write	**VM2**	**VM1**	**VM0**	**VIM**	**Reset value: 1111b**
VMST: Read	**–**	**–**	**reserved**	**VMS**	**Reset value: xx11b**

VM2: **V**oltage monitor **M**ode bit **2**
VM1: **V**oltage monitor **M**ode bit **1**
VM0: **V**oltage monitor **M**ode bit **0**

VM2	VM1	VM0	Function
1	1	1	Disable voltage monitor
1	1	0	External (VIM-input), internal reference threshold (1.3 V), interrupt with negative slope
1	0	1	Not allowed
1	0	0	External (VMI-input), internal reference threshold (1.3 V), interrupt with positive slope
0	1	1	Internal (supply voltage), high threshold (3.0 V), interrupt with negative slope
0	1	0	Internal (supply voltage), middle threshold (2.6 V), interrupt with negative slope
0	0	1	Internal (supply voltage), low threshold (2.2 V), interrupt with negative slope
0	0	0	Not allowed

VIM **V**oltage **I**nterrupt **M**ask bit
VIM = 0, voltage monitor interrupt is enabled
VIM = 1, voltage monitor interrupt is disabled

VMS **V**oltage **M**onitor **S**tatus bit
VMS = 0, the voltage at the comparator input is below V_{Ref}
VMS = 1, the voltage at the comparator input is above V_{Ref}

Figure 18. Internal Supply Voltage Supervisor

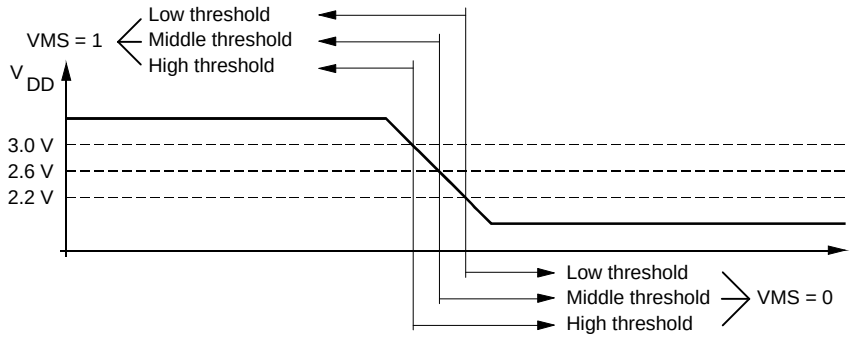

Figure 19. External Input Voltage Supervisor

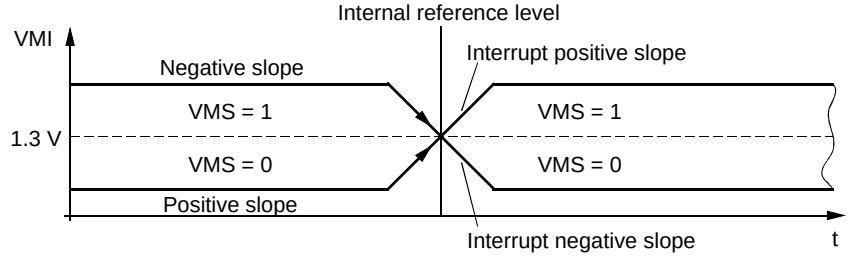

Clock Generation

Clock Module

The T48C862-R3 contains a clock module with 4 different internal oscillator types: two RC-oscillators, one 4-MHz crystal oscillator and one 32-kHz crystal oscillator. The pins OSC1 and OSC2 are the interface to connect a crystal either to the 4-MHz, or to the 32-kHz crystal oscillator. OSC1 can be used as input for external clocks or to connect an external trimming resistor for the RC-oscillator 2. All necessary circuitry, except the crystal and the trimming resistor, is integrated on-chip. One of these oscillator types or an external input clock can be selected to generate the system clock (SYSCL).

In applications that do not require exact timing, it is possible to use the fully integrated RC-oscillator 1 without any external components. The RC-oscillator 1 center frequency tolerance is better than ± 50%. The RC-oscillator 2 is a trimmable oscillator whereby the oscillator frequency can be trimmed with an external resistor attached between OSC1 and V_{DD}. In this configuration, the RC-oscillator 2 frequency can be maintained stable with a tolerance of ± 15% over the full operating temperature and voltage range.

The clock module is programmable via software with the clock management register (CM) and the system configuration register (SC). The required oscillator configuration can be selected with the OS1-bit and the OS0-bit in the SC-register. A programmable 4-bit divider stage allows the adjustment of the system clock speed. A special feature of the clock management is that an external oscillator may be used and switched on and off via a port pin for the power-down mode. Before the external clock is switched off, the internal RC-oscillator 1 must be selected with the CCS-bit and then the SLEEP mode may be activated. In this state an interrupt can wake up the controller with the RC-oscillator, and the external oscillator can be activated and selected by software. A synchronization stage avoids too short clock periods if the clock source or the clock speed is changed. If an external input clock is selected, a supervisor circuit monitors the external input and generates a hardware reset if the external clock source fails or drops below 500 kHz for more than 1 ms.

Figure 20. Clock Module

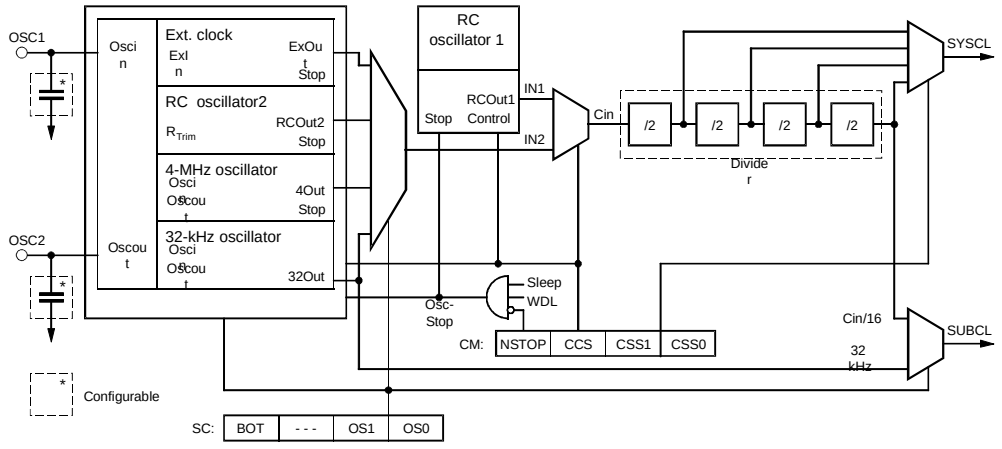

Table 3. Clock Modes

Mode	OS1	OS0	Clock Source for SYSCL		Clock Source for SUBCL
			CCS = 1	CCS = 0	
1	1	1	RC-oscillator 1 (internal)	External input clock	$C_{in}/16$
2	0	1	RC-oscillator 1 (internal)	RC-oscillator 2 with external trimming resistor	$C_{in}/16$
3	1	0	RC-oscillator 1 (internal)	4-MHz oscillator	$C_{in}/16$
4	0	0	RC-oscillator 1 (internal)	32-kHz oscillator	32 kHz

The clock module generates two output clocks. One is the system clock (SYSCL) and the other the periphery (SUBCL). The SYSCL can supply the core and the peripherals and the SUBCL can supply only the peripherals with clocks. The modes for clock sources are programmable with the OS1-bit and OS0-bit in the SC-register and the CCS-bit in the CM-register.

Oscillator Circuits and External Clock Input Stage

The microcontroller block series consists of four different internal oscillators: two RC-oscillators, one 4-MHz crystal oscillator, one 32-kHz crystal oscillator and one external clock input stage.

RC-oscillator 1 Fully Integrated

For timing insensitive applications, it is possible to use the fully integrated RC oscillator 1. It operates without any external components and saves additional costs. The RC-oscillator 1 center frequency tolerance is better than ±50% over the full temperature and voltage range. The basic center frequency of the RC-oscillator 1 is $f_O \approx 3.8$ MHz. The RC oscillator 1 is selected by default after power-on reset.

Figure 21. RC-oscillator 1

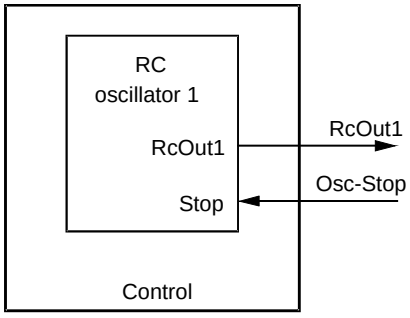

External Input Clock

The OSC1 or OSC2 (mask option) can be driven by an external clock source provided it meets the specified duty cycle, rise and fall times and input levels. Additionally, the external clock stage contains a supervisory circuit for the input clock. The supervisor function is controlled via the OS1, OS0-bit in the SC-register and the CCS-bit in the CM-register. If the external input clock is missing for more than 1 ms and CCS = 0 is set in the CM-register, the supervisory circuit generates a hardware reset.

Figure 22. External Input Clock

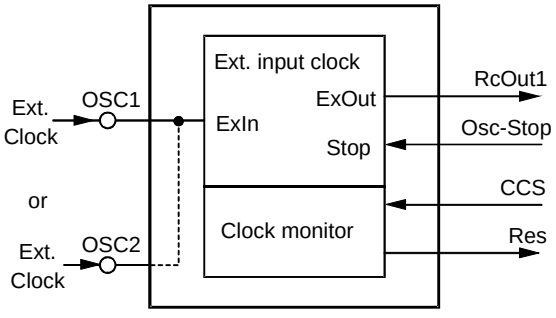

OS1	OS0	CCS	Supervisor Reset Output (Res)
1	1	0	Enable
1	1	1	Disable
x	0	x	Disable

RC-oscillator 2 with External Trimming Resistor

The RC-oscillator 2 is a high resolution trimmable oscillator whereby the oscillator frequency can be trimmed with an external resistor between OSC1 and V_{DD}. In this configuration, the RC-oscillator 2 frequency can be maintained stable with a tolerance of ±10% over the full operating temperature and a voltage range V_{DD} from 2.5 V to 6.0 V.

For example:
An output frequency at the RC-oscillator 2 of 2 MHz can be obtained by connecting a resistor R_{ext} = 360 kΩ (see Figure 23).

Figure 23. RC-oscillator 2

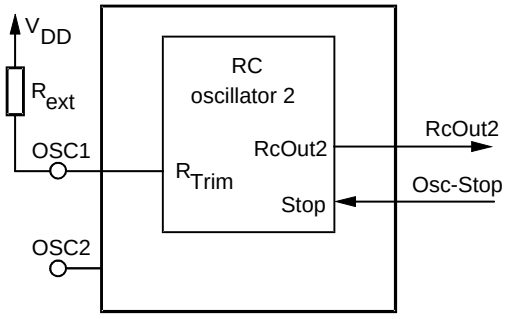

4-MHz Oscillator

The microcontroller block 4-MHz oscillator options need a crystal or ceramic resonator connected to the OSC1 and OSC2 pins to establish oscillation. All the necessary oscillator circuitry is integrated, except the actual crystal, resonator, C3 and C4.

Figure 24. 4-MHz Crystal Oscillator

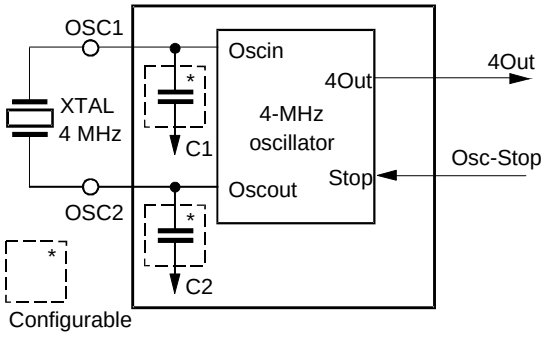

Figure 25. Ceramic Resonator

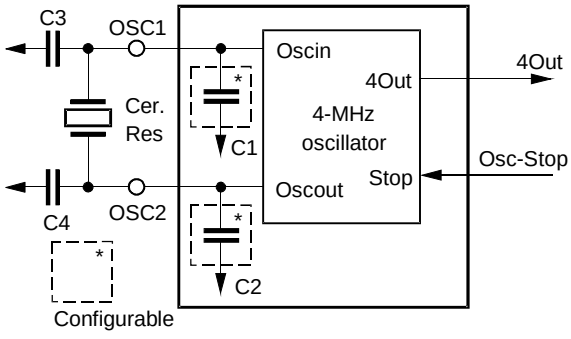

32-kHz Oscillator

Some applications require long-term time keeping or low resolution timing. In this case, an on-chip, low power 32-kHz crystal oscillator can be used to generate both the SUBCL and the SYSCL. In this mode, power consumption is greatly reduced. The 32-kHz crystal oscillator can not be stopped while the power-down mode is in operation.

Figure 26. 32-kHz Crystal Oscillator

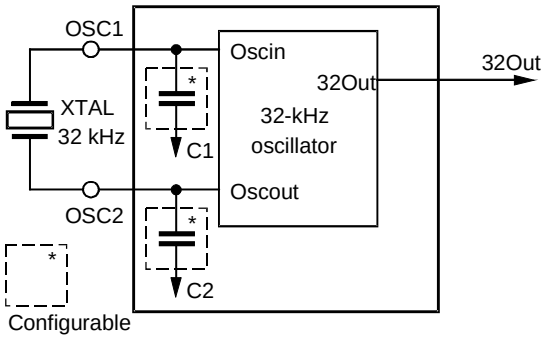

Clock Management

The clock management register controls the system clock divider and synchronization stage. Writing to this register triggers the synchronization cycle.

Clock Management Register (CM)

Auxiliary register address: "3"hex

	Bit 3	Bit 2	Bit 1	Bit 0	
CM:	**NSTOP**	**CCS**	**CSS1**	**CSS0**	**Reset value: 1111b**

NSTOP **N**ot **STOP** peripheral clock
NSTOP = 0, stops the peripheral clock while the core is in SLEEP mode
NSTOP = 1, enables the peripheral clock while the core is in SLEEP mode

CCS **C**ore **C**lock **S**elect
CCS = 1, the internal RC-oscillator 1 generates SYSCL
CCS = 0, the 4-MHz crystal oscillator, the 32-kHz crystal oscillator, an external clock source or the internal RC-oscillator 2 with the external resistor at OSC1 generates SYSCL dependent on the setting of OS0 and OS1 in the system configuration register

CSS1 **C**ore **S**peed **S**elect **1**

CSS0 **C**ore **S**peed **S**elect **0**

CSS1	CSS0	Divider	Note
0	0	16	
1	1	8	Reset value
1	0	4	
0	1	2	

System Configuration Register (SC)

Primary register address: "3"hex

	Bit 3	Bit 2	Bit 1	Bit 0	
SC: write	**BOT**	**---**	**OS1**	**OS0**	**Reset value: 1x11b**

BOT **B**rown-**O**ut **T**hreshold
BOT = 1, low brown-out voltage threshold (1.7 V)
BOT = 0, high brown-out voltage threshold (2.0 V)

OS1 **O**scillator **S**elect **1**

OS0 **O**scillator **S**elect **0**

Mode	OS1	OS0	Input for SUBCL	Selected Oscillators
1	1	1	$C_{in/}16$	RC-oscillator 1 and external input clock
2	0	1	$C_{in}/16$	RC-oscillator 1 and RC-oscillator 2
3	1	0	$C_{in}/16$	RC-oscillator 1 and 4-MHz crystal oscillator
4	0	0	32 kHz	RC-oscillator 1 and 32-kHz crystal oscillator

Note: If the bit CCS = 0 in the CM-register the RC-oscillator 1 always stops.

Power-down Modes

The sleep mode is a shut-down condition which is used to reduce the average system power consumption in applications where the microcontroller is not fully utilized. In this mode, the system clock is stopped. The sleep mode is entered via the SLEEP instruction. This instruction sets the interrupt enable bit (I) in the condition code register to enable all interrupts and stops the core. During the sleep mode the peripheral modules remain active and are able to generate interrupts. The microcontroller exits the sleep mode by carrying out any interrupt or a reset.

The sleep mode can only be kept when none of the interrupt pending or active register bits are set. The application of the $AUTOSLEEP routine ensures the correct function of the sleep mode. For standard applications use the $AUTOSLEEP routine to enter the power-down mode. Using the SLEEP instruction instead of the $AUTOSLEEP following an I/O instruction requires to insert 3 non-I/O instruction cycles (for example NOP NOP NOP) between the IN or OUT command and the SLEEP command.

The total power consumption is directly proportional to the active time of the microcontroller. For a rough estimation of the expected average system current consumption, the following formula should be used:

$$I_{total}\ (V_{DD}, f_{syscl}) = I_{Sleep} + (I_{DD} \times t_{active}/t_{total})$$

I_{DD} depends on V_{DD} and f_{syscl}

The microcontroller block has various power-down modes. During the sleep mode the clock for the microcontroller block core is stopped. With the NSTOP-bit in the clock management register (CM), it is programmable if the clock for the on-chip peripherals is active or stopped during the sleep mode. If the clock for the core and the peripherals is stopped, the selected oscillator is switched off. An exception is the 32-kHz oscillator, if it is selected it runs continuously independent of the NSTOP-bit. If the oscillator is stopped or the 32-kHz oscillator is selected, power consumption is extremely low.

Table 4. Power-down Modes

Mode	CPU Core	Osc-Stop [1]	Brown-out Function	RC-oscillator 1 RC-oscillator 2 4-MHz Oscillator	32-kHz Oscillator	External Input Clock
Active	RUN	NO	Active	RUN	RUN	YES
Power-down	SLEEP	NO	Active	RUN	RUN	YES
SLEEP	SLEEP	YES	STOP	STOP	RUN	STOP

Note: 1. Osc-Stop = SLEEP and NSTOP and WDL

Peripheral Modules

Addressing Peripherals

Accessing the peripheral modules takes place via the I/O bus (see Figure 21). The IN or OUT instructions allow direct addressing of up to 16 I/O modules. A dual register addressing scheme has been adopted to enable direct addressing of the primary register. To address the auxiliary register, the access must be switched with an auxiliary switching module. Thus, a single IN (or OUT) to the module address will read (or write into) the module primary register. Accessing the auxiliary register is performed with the same instruction preceded by writing the module address into the auxiliary switching module. Byte wide registers are accessed by multiple IN- (or OUT-) instructions. For more complex peripheral modules, with a larger number of registers, extended addressing is used. In this case, a bank of up to 16 subport registers are indirectly addressed with the subport address. The first OUT-instruction writes the subport address to the sub address register, the second IN- or OUT-instruction reads data from or writes data to the addressed subport.

Figure 27. Example of I/O Addressing

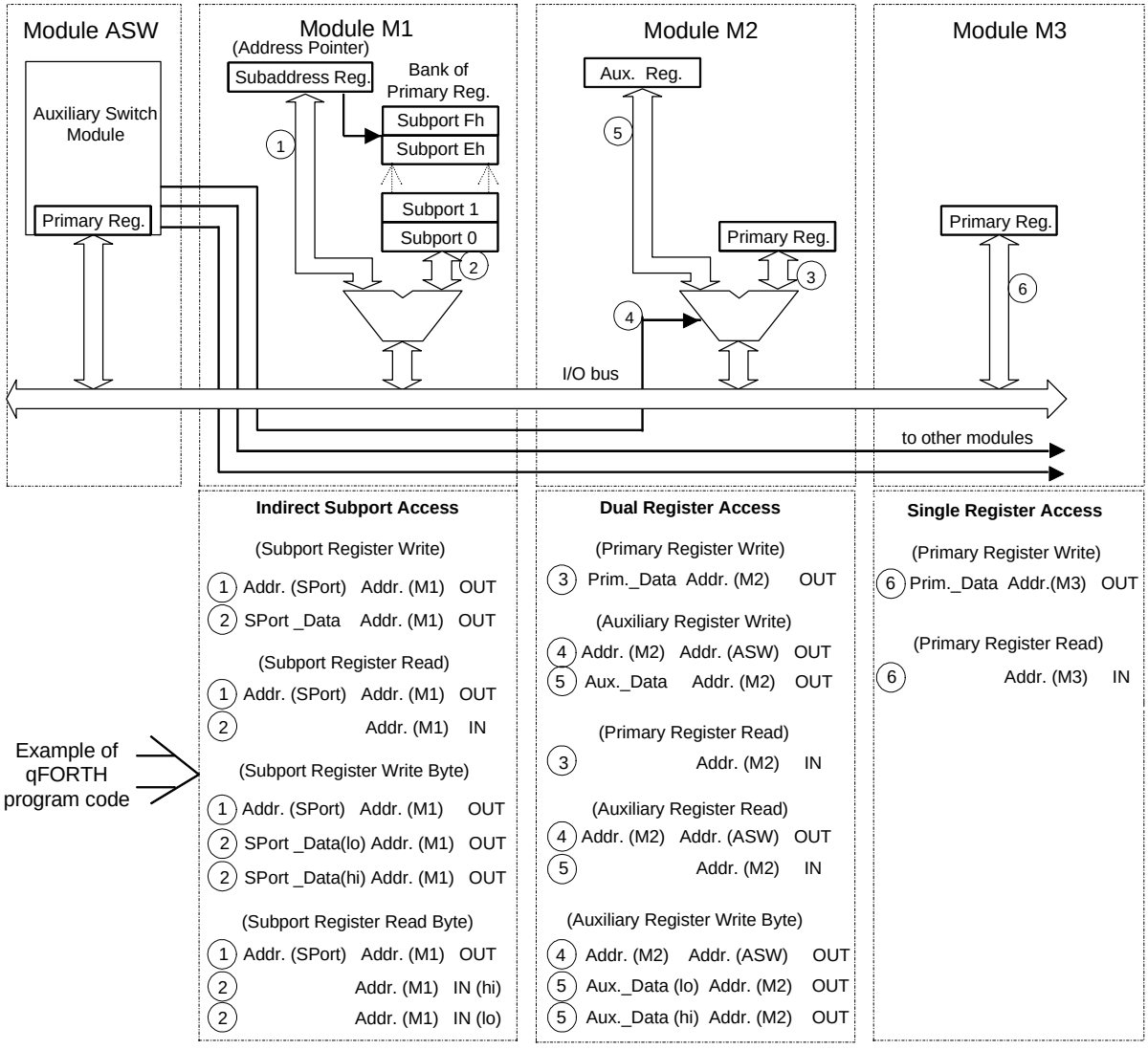

Addr.(ASW) = Auxiliary Switch Module address
Addr.(Mx) = Module Mx address
Addr.(SPort) = Subport address
Prim._Data = Data to be written into Primary Register
Aux._Data = Data to be written into Auxiliary Register
Prim._Data(lo) = Data to be written into Auxiliary Register (low nibble)
Prim._Data(hi) = Data to be written into Auxiliary Register (high nibble)
SPort_Data(lo) = Data to be written into SubPort (low nibble)
SPort_Data(hi) = Data to be written into SubPort (high nibble)

(lo) = SPort_Data (low nibble)
(hi) = SPort_Data (high nibble)

Table 5. Peripheral Addresses

Port Address			Name	Write/ Read	Reset Value	Register Function	Module Type	See Page
1			P1DAT	W/R	1xx1b	Port 1 - data register/input data	M3	22
2			P2DAT	W/R	1111b	Port 2 - data register/pin data	M2	23
	Auxiliary		P2CR	W	1111b	Port 2 - control register		23
3			SC	W	1x11b	System configuration register	M3	19
			CWD	R	xxxxb	Watchdog reset	M3	29
	Auxiliary		CM	W/R	1111b	Clock management register	M2	18
4			P4DAT	W/R	1111b	Port 4 - data register/pin data	M2	27
	Auxiliary		P4CR	W	1111 1111b	Port 4 - control register (byte)		27
5			P5DAT	W/R	1111b	Port 5 - data register/pin data	M2	25
	Auxiliary		P5CR	W	1111 1111b	Port 5 - control register (byte)		25
6			P6DAT	W/R	1xx1b	Port 6 - data register/pin data	M2	28
	Auxiliary		P6CR	W	1111b	Port 6 - control register (byte)		28
7			T12SUB	W	–	Data to Timer 1/2 subport	M1	20
		Subport address						
		0	T2C	W	0000b	Timer 2 control register	M1	39
		1	T2M1	W	1111b	Timer 2 mode register 1	M1	40
		2	T2M2	W	1111b	Timer 2 mode register 2	M1	41
		3	T2CM	W	0000b	Timer 2 compare mode register	M1	42
		4	T2CO1	W	1111b	Timer 2 compare register 1	M1	42
		5	T2CO2	W	1111 1111b	Timer 2 compare register 2 (byte)	M1	42
		6	–	–	–	Reserved		
		7	–	–	–	Reserved		
		8	T1C1	W	1111b	Timer 1 control register 1	M1	31
		9	T1C2	W	x111b	Timer 1 control register 2	M1	32
		A	WDC	W	1111b	Watchdog control register	M1	32
		B-F				Reserved		
8			ASW	W	1111b	Auxiliary/switch register	ASW	20
9			STB	W	xxxx xxxxb	Serial transmit buffer (byte)	M2	65
			SRB	R	xxxx xxxxb	Serial receive buffer (byte)		65
	Auxiliary		SIC1	W	1111b	Serial interface control register 1		63
A			SISC	W/R	1x11b	Serial interface status/control register	M2	65
	Auxiliary		SIC2	W	1111b	Serial interface control register 2		64
B			T3SUB	W/R	–	Data to/from Timer 3 subport	M1	20
		Subport address						
		0	T3M	W	1111b	Timer 3 mode register	M1	51
		1	T3CS	W	1111b	Timer 3 clock select register	M1	52
		2	T3CM1	W	0000b	Timer 3 compare mode register 1	M1	53
		3	T3CM2	W	0000b	Timer 3 compare mode register 2	M1	54
		4	T3CO1	W	1111 1111b	Timer 3 compare register 1 (byte)	M1	54
		4	T3CP	R	xxxx xxxxb	Timer 3 capture register (byte)	M1	55
		5	T3CO2	W	1111 1111b	Timer 3 compare register 2 (byte)	M1	54
		6		W	1111b	Reserved		
		7-F			–	Reserved		
C		T3C		W	0000b	Timer 3 control register	M3	52
		T3ST		R	x000b	Timer 3 status register	M3	52
D, E		–			–	Reserved		
F		VMC		W	1111b	Voltage monitor control register	M3	12
		VMST		R	xx11b	Voltage monitor status register	M3	12

Bi-directional Ports

With the exception of Port 1 and Port 6, all other ports (2, 4 and 5) are 4 bits wide. Port 1 and Port 6 have a data width of 2 bits (bit 0 and bit 3). All ports may be used for data input or output. All ports are equipped with Schmitt trigger inputs and a variety of mask options for open-drain, open-source, full-complementary outputs, pull-up and pull-down transistors. All Port Data Registers (PxDAT) are I/O mapped to the primary address register of the respective port address and the Port Control Register (PxCR), to the corresponding auxiliary register.

There are five different directional ports available:

Port 1 2-bit wide bi-directional port with automatic full bus width direction switching.

Port 2 4-bit wide bitwise-programmable I/O port.

Port 5 4-bit wide bitwise-programmable bi-directional port with optional strong pull-ups and programmable interrupt logic.

Port 4 4-bit wide bitwise-programmable bi-directional port also provides the I/O interface to Timer 2, SSI, voltage monitor input and external interrupt input.

Port 6 2-bit wide bitwise-programmable bi-directional port also provides the I/O interface to Timer 3 and external interrupt input.

Bi-directional Port 1

In Port 1 the data direction register is not independently software programmable, the direction of the complete port being switched automatically when an I/O instruction occurs (see Figure 28). The port is switched to output mode via an OUT instruction and to input via an IN instruction. The data written to a port will be stored into the output data latches and appears immediately at the port pin following the OUT instruction. After RESET all output latches are set to "1" and the port is switched to input mode. An IN instruction reads the condition of the associated pins.

Note: Care must be taken when switching the bi-directional port from output to input. The capacitive pin loading at this port in conjunction with the high resistance pull-ups may cause the CPU to read the contents of the output data register rather than the external input state. To avoid this, one of the following programming techniques should be used:
Use two IN-instructions and DROP the first data nibble. The first IN switches the port from output to input and the DROP removes the first invalid nibble. The second IN reads the valid pin state.
Use an OUT-instruction followed by an IN-instruction. Via the OUT-instruction, the capacitive load is charged or discharged depending on the optional pull-up/pull-down configuration. Write a "1" for pins with pull-up resistors and a "0" for pins with pull-down resistors.

Figure 28. Bi-directional Port 1

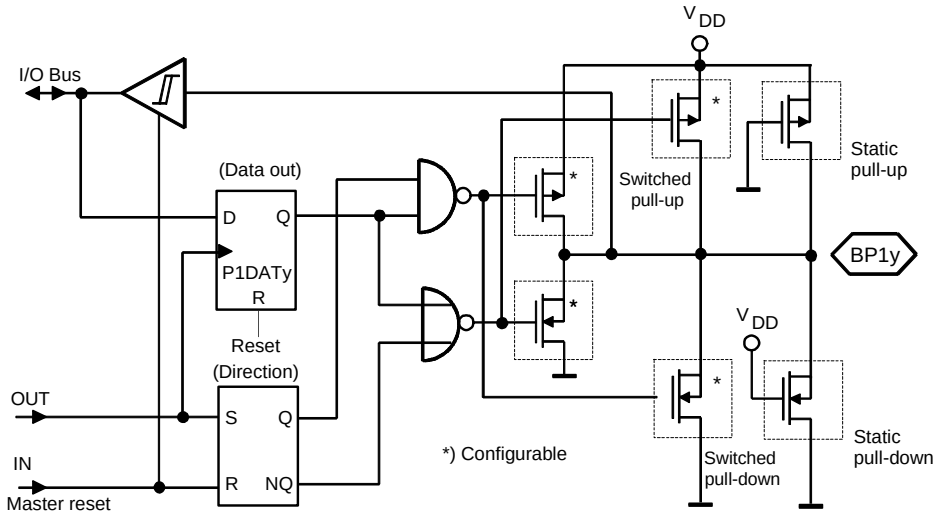

Bi-directional Port 2

As all other bi-directional ports, this port includes a bitwise programmable Control Register (P2CR), which enables the individual programming of each port bit as input or output. It also opens up the possibility of reading the pin condition when in output mode. This is a useful feature for self testing and for serial bus applications.

Port 2, however, has an increased drive capability and an additional low resistance pull-up/pull-down transistor mask option.

Care should be taken connecting external components to BP20/NTE. During any reset phase, the BP20/NTE input is driven towards V_{DD} by an additional internal strong pull-up transistor. This pin must not be pulled down (active or passive) to V_{SS} during reset by any external circuitry representing a resistor of less than 150 kΩ. This prevents the circuit from unintended switching to test mode enable through the application circuitry at pin BP20/NTE. Resistors less than 150 kΩ might lead to an undefined state of the internal test logic thus disabling the application firmware.

To avoid any conflict with the optional internal pull-down transistors, BP20 handles the pull-down options in a different way than all other ports. BP20 is the only port that switches off the pull-down transistors during reset.

Figure 29. Bi-directional Port 2

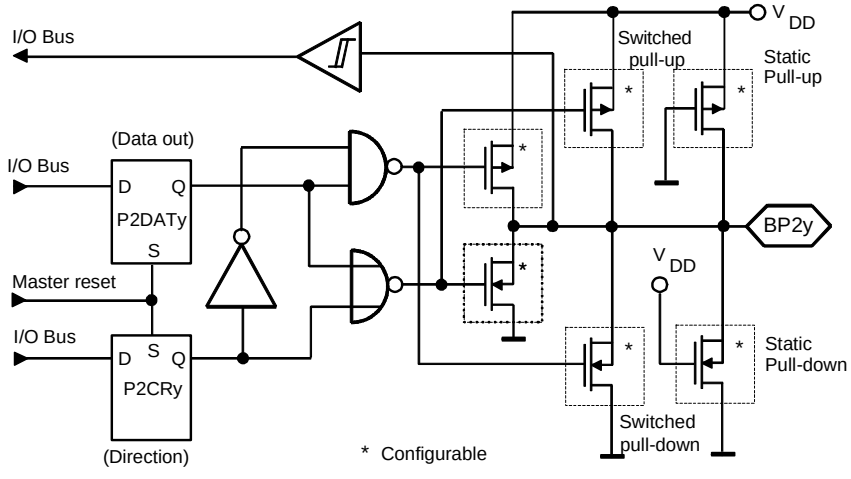

Port 2 Data Register (P2DAT) Primary register address: "2"hex

Bit 3 *	Bit 2	Bit 1	Bit 0
P2DAT3	**P2DAT2**	**P2DAT1**	**P2DAT0**

Reset value: 1111b

* Bit 3 -> MSB, Bit 0 -> LSB

Port 2 Control Register (P2CR) Auxiliary register address: "2"hex

Bit 3	Bit 2	Bit 1	Bit 0
P2CR3	**P2CR2**	**P2CR1**	**P2CR0**

Reset value: 1111b

Value: 1111b means all pins in input mode

Code 3 2 1 0	Function
x x x 1	BP20 in input mode
x x x 0	BP20 in output mode
x x 1 x	BP21 in input mode
x x 0 x	BP21 in output mode
x 1 x x	BP22 in input mode
x 0 x x	BP22 in output mode
1 x x x	BP23 in input mode
0 x x x	BP23 in output mode

Bi-directional Port 5

As all other bi-directional ports, this port includes a bitwise programmable Control Register (P5CR), which allows the individual programming of each port bit as input or output. It also opens up the possibility of reading the pin condition when in output mode. This is a useful feature for self testing and for serial bus applications.

The port pins can also be used as external interrupt inputs (see Figure 30 and Figure 31). The interrupts (INT1 and INT6) can be masked or independently configured to trigger on either edge. The interrupt configuration and port direction is controlled by the Port 5 Control Register (P5CR). An additional low resistance pull-up/pull-down transistor mask option provides an internal bus pull-up for serial bus applications.

The Port 5 Data Register (P5DAT) is I/O mapped to the primary address register of address "5"h and the Port 5 Control Register (P5CR) to the corresponding auxiliary register. The P5CR is a byte-wide register and is configured by writing first the low nibble and then the high nibble (see section "Addressing Peripherals").

Figure 30. Bi-directional Port 5

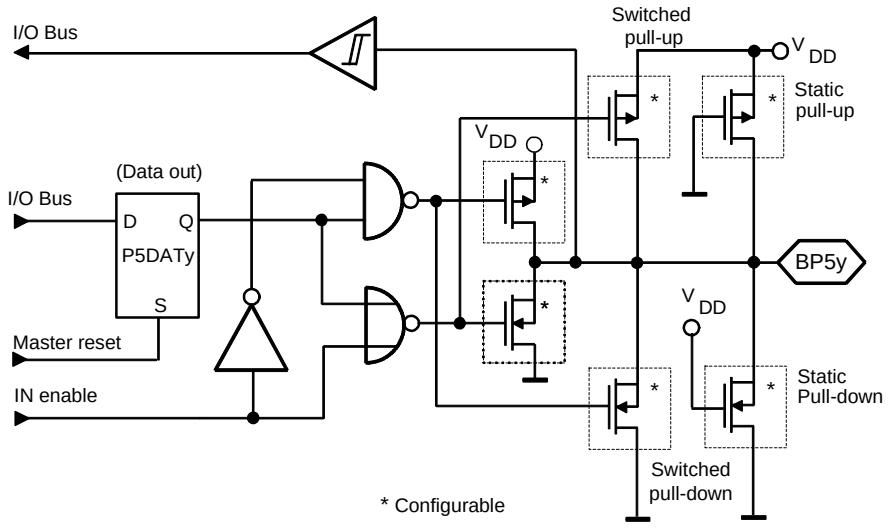

Figure 31. Port 5 External Interrupts

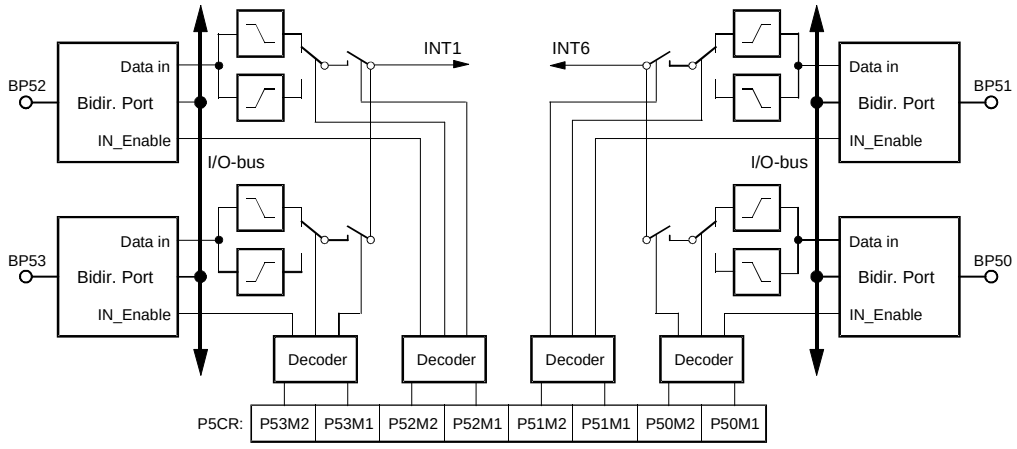

Port 5 Data Register (P5DAT) Primary register address: "5"hex

Bit 3	Bit 2	Bit 1	Bit 0
P5DAT3	**P5DAT2**	**P5DAT1**	**P5DAT0**

Reset value: 1111b

Port 5 Control Register (P5CR)
Byte Write

Auxiliary register address: "5"hex

	Bit 3	Bit 2	Bit 1	Bit 0	
First write cycle	**P51M2**	**P51M1**	**P50M2**	**P50M1**	**Reset value: 1111b**
	Bit 7	Bit 6	Bit 5	Bit 4	
Second write cycle	**P53M2**	**P53M1**	**P52M2**	**P52M1**	**Reset value: 1111b**

Table 6. P5xM2, P5xM1 – Port 5x Interrupt Mode/Direction Code

Auxiliary Address: "5"hex, First Write Cycle		Second Write Cycle	
Code 3 2 1 0	**Function**	**Code 3 2 1 0**	**Function**
x x 1 1	BP50 in input mode – interrupt disabled	x x 1 1	BP52 in input mode – interrupt disabled
x x 0 1	BP50 in input mode – rising edge interrupt	x x 0 1	BP52 in input mode – rising edge interrupt
x x 1 0	BP50 in input mode – falling edge interrupt	x x 1 0	BP52 in input mode – falling edge interrupt
x x 0 0	BP50 in output mode – interrupt disabled	x x 0 0	BP52 in output mode – interrupt disabled
1 1 x x	BP51 in input mode – interrupt disabled	1 1 x x	BP53 in input mode – interrupt disabled
0 1 x x	BP51 in input mode – rising edge interrupt	0 1 x x	BP53 in input mode – rising edge interrupt
1 0 x x	BP51 in input mode – falling edge interrupt	1 0 x x	BP53 in input mode – falling edge interrupt
0 0 x x	BP51 in output mode – interrupt disabled	0 0 x x	BP53 in output mode – interrupt disabled

Bi-directional Port 4

The bi-directional Port 4 is a bitwise configurable I/O port and provides the external pins for the Timer 2, SSI and the voltage monitor input (VMI). As a normal port, it performs in exactly the same way as bi-directional Port 2 (see Figure 32). Two additional multiplexes allow data and port direction control to be passed over to other internal modules (Timer 2, VM or SSI). The I/O-pins for SC and SD line have an additional mode to generate an SSI-interrupt.

All four Port 4 pins can be individually switched by the P4CR-register. Figure 32 shows the internal interfaces to bi-directional Port 4.

Figure 32. Bi-directional Port 4 and Port 6

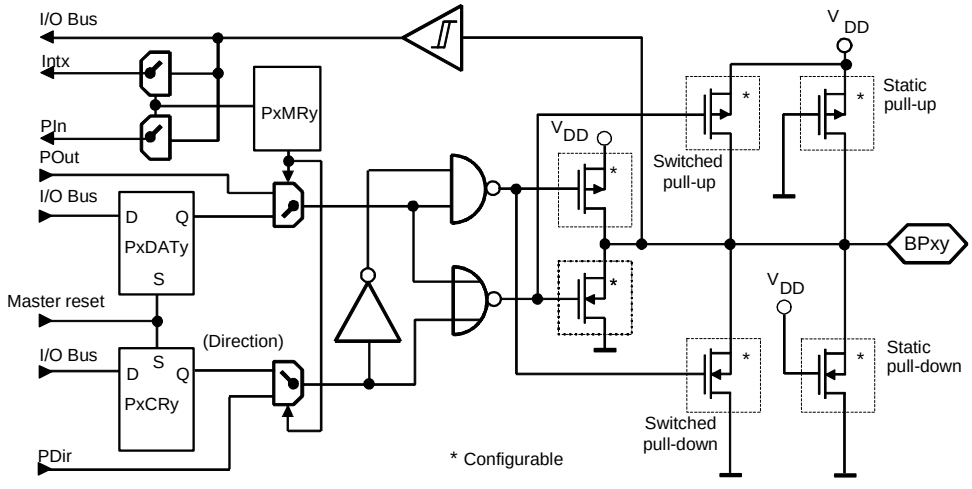

Port 4 Data Register (P4DAT) Primary register address: "4"hex

Bit 3	Bit 2	Bit 1	Bit 0
P4DAT3	**P4DAT2**	**P4DAT1**	**P4DAT0**

Reset value: 1111b

Port 4 Control Register (P4CR)
Byte Write

Auxiliary register address: "4"hex

	Bit 3	Bit 2	Bit 1	Bit 0	
First write cycle	**P41M2**	**P41M1**	**P40M2**	**P40M1**	**Reset value: 1111b**
	Bit 7	Bit 6	Bit 5	Bit 4	
Second write cycle	**P43M2**	**P43M1**	**P42M2**	**P42M1**	**Reset value: 1111b**

P4xM2, P4xM1 – Port 4x Interrupt mode/direction code

Auxiliary Address: "4"hex, First Write Cycle		**Second Write Cycle**	
Code 3 2 1 0	**Function**	**Code 3 2 1 0**	**Function**
x x 1 1	BP40 in input mode	x x 1 1	BP42 in input mode
x x 1 0	BP40 in output mode	x x 1 0	BP42 in output mode
x x 0 1	BP40 enable alternate function (SC for SSI)	x x 0 x	BP42 enable alternate function (T2O for Timer 2)
x x 0 0	BP40 enable alternate function (falling edge interrupt input for INT3)	1 1 x x	BP43 in input mode
1 1 x x	BP41 in input mode	1 0 x x	BP43 in output mode
1 0 x x	BP41 in output mode	0 1 x x	BP43 enable alternate function (SD for SSI)
0 1 x x	BP41 enable alternate function (VMI for voltage monitor input)	0 0 x x	BP43 enable alternate function (falling edge interrupt input for INT3)
0 0 x x	BP41 enable alternate function (T2I external clock input for Timer 2)	–	–

Bi-directional Port 6

The bi-directional Port 6 is a bitwise configurable I/O port and provides the external pins for the Timer 3. As a normal port, it performs in exactly the same way as bi-directional Port 6 (see Figure 32). Two additional multiplexes allow data and port direction control to be passed over to other internal module (Timer 3). The I/O-pin for T3I line has an additional mode to generate a Timer 3-interrupt.

All two Port 6 pins can be individually switched by the P6CR register. Figure 32 shows the internal interfaces to bi-directional Port 6.

Port 6 Data Register (P6DAT) Primary register address: "6"hex

Bit 3	Bit 2	Bit 1	Bit 0
P6DAT3	**- - -**	**- - -**	**P6DAT0**

Reset value: 1xx1b

Port 6 Control Register (P6CR) Auxiliary register address: "6"hex

Bit 3	Bit 2	Bit 1	Bit 0
P63M2	**P63M1**	**P60M2**	**P60M0**

Reset value: 1111b

P6xM2, P6xM1 – Port 6x Interrupt mode/direction code

Auxiliary Address: "6"hex		**Write Cycle**	
Code 3 2 1 0	**Function**	**Code 3 2 1 0**	**Function**
x x 1 1	BP60 in input mode	1 1 x x	BP63 in input mode
x x 1 0	BP60 in output mode	1 0 x x	BP63 in output mode
x x 0 x	BP60 enable alternate port function (T3O for Timer 3)	0 x x x	BP63 enable alternate port function (T3I for Timer 3)

Universal Timer/Counter/ Communication Module (UTCM)

The Universal Timer/counter/Communication Module (UTCM) consists of three timers (Timer 1,Timer 2, Timer 3) and a Synchronous Serial Interface (SSI).

- Timer 1 is an interval timer that can be used to generate periodical interrupts and as prescaler for Timer 2, Timer 3, the serial interface and the watchdog function.
- Timer 2 is an 8/12-bit timer with an external clock input (T2I) and an output (T2O).
- Timer 3 is an 8-bit timer/counter with its own input (T3I) and output (T3O).
- The SSI operates as two wire serial interface or as shift register for modulation and demodulation. The modulator and demodulator units work together with the timers and shift the data bits into or out of the shift register.

There is a multitude of modes in which the timers and the serial interface can work together.

Figure 33. UTCM Block Diagram

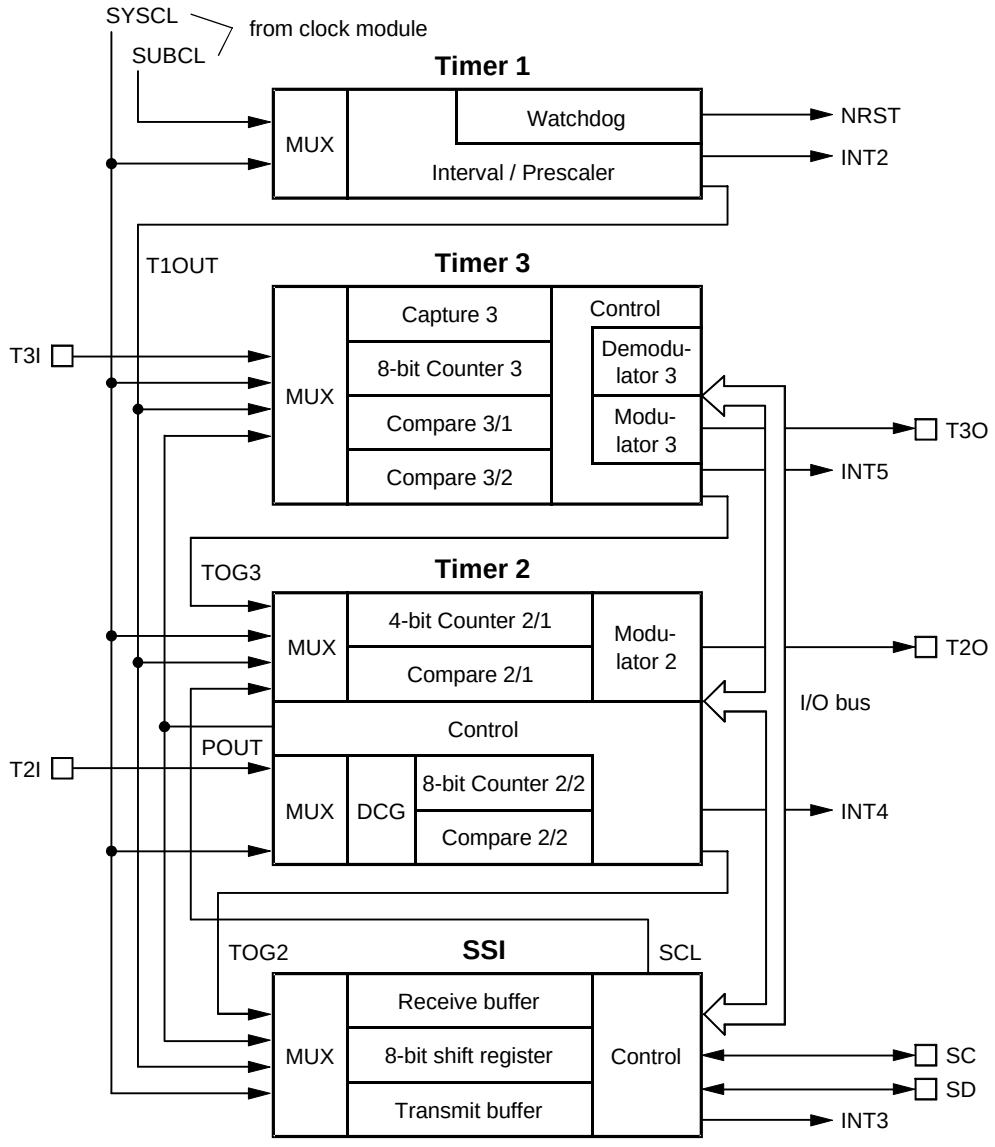

Timer 1

The Timer 1 is an interval timer which can be used to generate periodical interrupts and as prescaler for Timer 2, Timer 3, the serial interface and the watchdog function.

The Timer 1 consists of a programmable 14-stage divider that is driven by either SUBCL or SYSCL. The timer output signal can be used as prescaler clock or as SUBCL and as source for the Timer 1 interrupt. Because of other system requirements, the Timer 1 output T1OUT is synchronized with SYSCL. Therefore, in the power-down mode SLEEP (CPU core -> sleep and OSC-Stop -> yes), the output T1OUT is stopped (T1OUT = 0). Nevertheless, the Timer 1 can be active in SLEEP and generate Timer 1 interrupts. The interrupt is maskable via the T1IM bit and the SUBCL can be bypassed via the T1BP bit of the T1C2 register. The time interval for the timer output can be programmed via the Timer 1 control register T1C1.

This timer starts running automatically after any power-on reset! If the watchdog function is not activated, the timer can be restarted by writing into the T1C1 register with T1RM = 1.

Timer 1 can also be used as a watchdog timer to prevent a system from stalling. The watchdog timer is a 3-bit counter that is supplied by a separate output of Timer 1. It generates a system reset when the 3-bit counter overflows. To avoid this, the 3-bit counter must be reset before it overflows. The application software has to accomplish this by reading the CWD register.

After power-on reset the watchdog must be activated by software in the $RESET initialization routine. There are two watchdog modes, in one mode the watchdog can be switched on and off by software, in the other mode the watchdog is active and locked. This mode can only be stopped by carrying out a system reset.

The watchdog timer operation mode and the time interval for the watchdog reset can be programmed via the watchdog control register (WDC).

Figure 34. Timer 1 Module

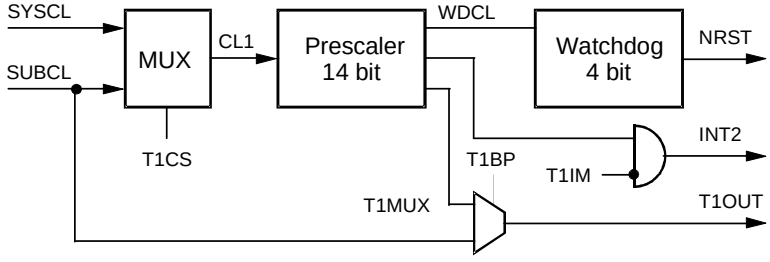

Figure 35. Timer 1 and Watchdog

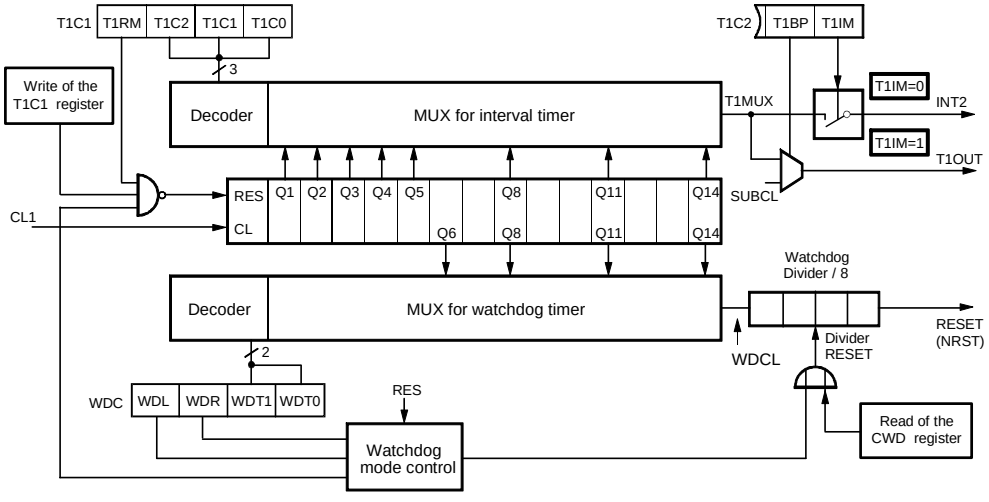

Timer 1 Control Register 1 (T1C1)

Address: "7"hex - Subaddress: "8"hex

Bit 3 *	Bit 2	Bit 1	Bit 0
T1RM	**T1C2**	**T1C1**	**T1C0**

Reset value: 1111b

* Bit 3 -> MSB, Bit 0 -> LSB

T1RM **T**imer **1** **R**estart **M**ode T1RM = 0, write access without Timer 1 restart
T1RM = 1, write access with Timer 1 restart
Note: If WDL = 0, Timer 1 restart is impossible

T1C2 **T**imer **1** **C**ontrol bit **2**

T1C1 **T**imer **1** **C**ontrol bit **1**

T1C0 **T**imer **1** **C**ontrol bit **0**

The three bits T1C[2:0] select the divider for timer 1. The resulting time interval depends on this divider and the timer 1 input clock source. The timer input can be supplied by the system clock, the 3-2kHz oscillator or via the clock management. If the clock management generates the SUBCL, the selected input clock from the RC oscillator, 4-MHz oscillator or an external clock is divided by 16.

T1C2	T1C1	T1C0	Divider	Time Interval with SUBCL	Time Interval with SUBCL = 32 kHz	Time Interval with SYSCL = 2/1 MHz
0	0	0	2	SUBCL/2	61 µs	1 µs/2 µs
0	0	1	4	SUBCL/4	122 µs	2 µs/4 µs
0	1	0	8	SUBCL/8	244 µs	4 µs/8 µs
0	1	1	16	SUBCL/16	488 µs	8 µs/16 µs
1	0	0	32	SUBCL/32	0.977 ms	16 µs/32 µs
1	0	1	256	SUBCL/256	7.812 ms	128 µs/256 µs
1	1	0	2048	SUBCL/2048	62.5 ms	1024 µs/2048 µs
1	1	1	16384	SUBCL/16384	500 ms	8192 µs/16384 µs

Timer 1 Control Register 2 (T1C2)

Address: "7"hex - Subaddress: "9"hex

Bit 3 *	Bit 2	Bit 1	Bit 0
- - -	**T1BP**	**T1CS**	**T1IM**

Reset value: x111b

* Bit 3 -> MSB, Bit 0 -> LSB

T1BP **T**imer **1** SUBCL **B**y**P**assed
T1BP = 1, TIOUT = T1MUX
T1BP = 0, T1OUT = SUBCL

T1CS **T**imer **1** input **C**lock **S**elect
T1CS = 1, CL1 = SUBCL (see Figure 28)
T1CS = 0, CL1 = SYSCL (see Figure 28)

T1IM **T**imer **1** **I**nterrupt **M**ask
T1IM = 1, disables Timer 1 interrupt
T1IM = 0, enables Timer 1 interrupt

Watchdog Control Register (WDC)

Address: "7"hex - Subaddress: "A"hex

Bit 3 *	Bit 2	Bit 1	Bit 0
WDL	**WDR**	**WDT1**	**WDT0**

Reset value: 1111b

* Bit 3 -> MSB, Bit 0 -> LSB

WDL **W**atch**D**og **L**ock mode
WDL = 1, the watchdog can be enabled and disabled by using the WDR-bit
WDL = 0, the watchdog is enabled and locked. In this mode the WDR-bit has no effect. After the WDL-bit is cleared, the watchdog is active until a system reset or power-on reset occurs.

WDR **W**atch**D**og **R**un and stop mode
WDR = 1, the watchdog is stopped/disabled
WDR = 0, the watchdog is active/enabled

WDT1 **W**atch**D**og **T**ime **1**

WDT0 **W**atch**D**og **T**ime **0**

Both these bits control the time interval for the watchdog reset.

WDT1	WDT0	Divider	Delay Time to Reset with SUBCL = 32 kHz	Delay Time to Reset with SYSCL = 2/1 MHz
0	0	512	15.625 ms	0.256 ms/0.512 ms
0	1	2048	62.5 ms	1.024 ms/2.048 ms
1	0	16384	0.5 s	8.2 ms/16.4 ms
1	1	131072	4 s	65.5 ms/131 ms

Timer 2

8-/12-bit Timer for:

- Interrupt, square-wave, pulse and duty cycle generation
- Baud-rate generation for the internal shift register
- Manchester and Biphase modulation together with the SSI
- Carrier frequency generation and modulation together with the SSI

Timer 2 can be used as an interval timer for interrupt generation, as signal generator or as baud-rate generator and modulator for the serial interface. It consists of a 4-bit and an 8-bit up counter stage which both have compare registers. The 4-bit counter stages of Timer 2 are cascadable as a 12-bit timer or as an 8-bit timer with 4-bit prescaler. The timer can also be configured as an 8-bit timer and separate a 4-bit prescaler.

The Timer 2 input can be supplied via the system clock, the external input clock (T2I), the Timer 1 output clock, the Timer 3 output clock or the shift clock of the serial interface. The external input clock T2I is not synchronized with SYSCL. Therefore, it is possible to use Timer 2 with a higher clock speed than SYSCL. Furthermore, with that input clock the Timer 2 operates in the power-down mode SLEEP (CPU core -> sleep and OSC-Stop -> yes) as well as in the POWER-DOWN (CPU core -> sleep and OSC-Stop -> no). All other clock sources supplied no clock signal in SLEEP. The 4-bit counter stages of Timer 2 have an additional clock output (POUT).

Its output has a modulator stage that allows the generation of pulses as well as the generation and modulation of carrier frequencies. The Timer 2 output can modulate with the shift register data output to generate Biphase- or Manchester code.

If the serial interface is used to modulate a bitstream, the 4-bit stage of Timer 2 has a special task. The shift register can only handle bitstream lengths divisible by 8. For other lengths, the 4-bit counter stage can be used to stop the modulator after the right bitcount is shifted out.

If the timer is used for carrier frequency modulation, the 4-bit stage works together with an additional 2-bit duty cycle generator like a 6-bit prescaler to generate carrier frequency and duty cycle. The 8-bit counter is used to enable and disable the modulator output for a programmable count of pulses.

For programming the time interval, the timer has a 4-bit and an 8-bit compare register. For programming the timer function, it has four mode and control registers. The comparator output of stage 2 is controlled by a special compare mode register (T2CM). This register contains mask bits for the actions (counter reset, output toggle, timer interrupt) which can be triggered by a compare match event or the counter overflow. This architecture enables the timer function for various modes.

The Timer 2 has a 4-bit compare register (T2CO1) and an 8-bit compare register (T2CO2). Both these compare registers are cascadable as a 12-bit compare register, or 8-bit compare register and 4-bit compare register.

For 12-bit compare data value:$m = x + 1$ $\quad 0 \leq x \leq 4095$

For 8-bit compare data value: $n = y + 1$ $\quad 0 \leq y \leq 255$

For 4-bit compare data value:$l = z + 1$ $\quad 0 \leq z \leq 15$

Figure 36. Timer 2

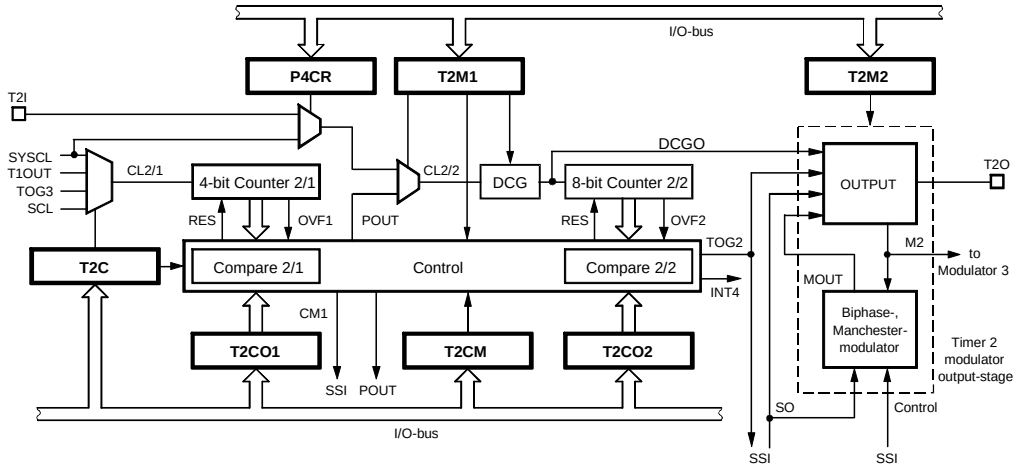

Timer 2 Modes

Mode 1: 12-bit Compare Counter

The 4-bit stage and the 8-bit stage work together as a 12-bit compare counter. A compare match signal of the 4-bit and the 8-bit stage generates the signal for the counter reset, toggle flip-flop or interrupt. The compare action is programmable via the compare mode register (T2CM). The 4-bit counter overflow (OVF1) supplies the clock output (POUT) with clocks. The duty cycle generator (DCG) has to be bypassed in this mode.

Figure 37. 12-bit Compare Counter

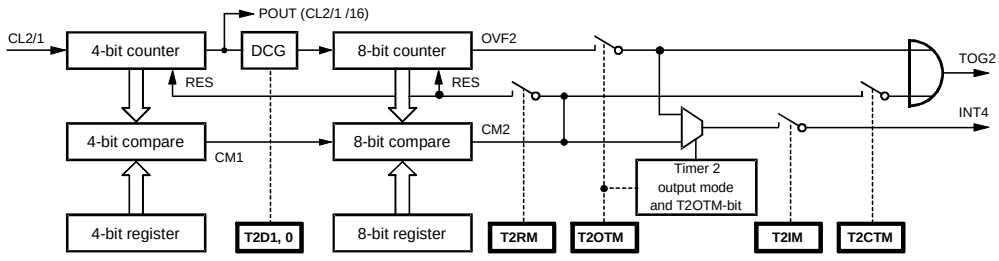

Mode 2: 8-bit Compare Counter with 4-bit Programmable Prescaler

Figure 38. 8-bit Compare Counter

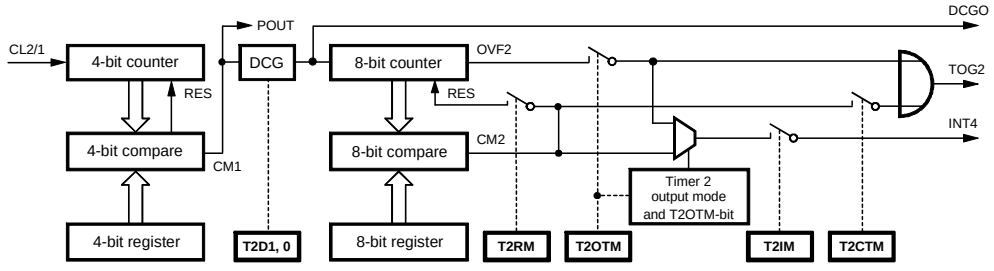

The 4-bit stage is used as programmable prescaler for the 8-bit counter stage. In this mode, a duty cycle stage is also available. This stage can be used as an additional 2-bit prescaler or for generating duty cycles of 25%, 33% and 50%. The 4-bit compare output (CM1) supplies the clock output (POUT) with clocks.

Mode 3/4: 8-bit Compare Counter and 4-bit Programmable Prescaler

Figure 39. 4-/8-bit Compare Counter

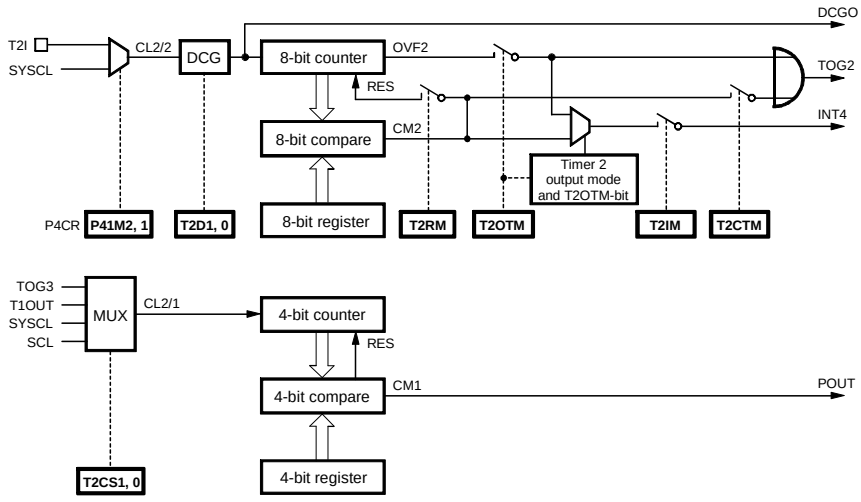

In these modes the 4-bit and the 8-bit counter stages work independently as a 4-bit prescaler and an 8-bit timer with an 2-bit prescaler or as a duty cycle generator. Only in the mode 3 and mode 4, can the 8-bit counter be supplied via the external clock input (T2I) which is selected via the P4CR register. The 4-bit prescaler is started via activating of mode 3 and stopped and reset in mode 4. Changing mode 3 and 4 has no effect for the 8-bit timer stage. The 4-bit stage can be used as prescaler for Timer 3, the SSI or to generate the stop signal for modulator 2 and modulator 3.

Timer 2 Output Modes

The signal at the timer output is generated via modulator 2. In the toggle mode, the compare match event toggles the output T2O. For high resolution duty cycle modulation 8 bits or 12 bits can be used to toggle the output. In the duty cycle burst modulator modes the DCG output is connected to T2O and switched on and off either by the toggle flipflop output or the serial data line of the SSI. Modulator 2 also has 2 modes to output the content of the serial interface as Biphase or Manchester code.

The modulator output stage can be configured by the output control bits in the T2M2 register. The modulator is started with the start of the shift register (SIR = 0) and stopped either by carrying out a shift register stop (SIR = 1) or compare match event of stage 1 (CM1) of Timer 2. For this task, Timer 2 mode 3 must be used and the prescaler has to be supplied with the internal shift clock (SCL).

Figure 40. Timer 2 Modulator Output Stage

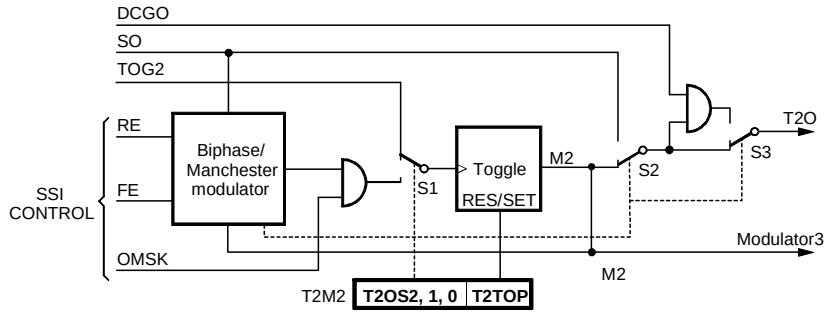

Timer 2 Output Signals

Timer 2 Output Mode 1

Toggle Mode A: A Timer 2 compare match toggles the output flip-flop (M2) -> T2O

Figure 41. Interrupt Timer/Square Wave Generator – the Output Toggles with Each Edge Compare Match Event

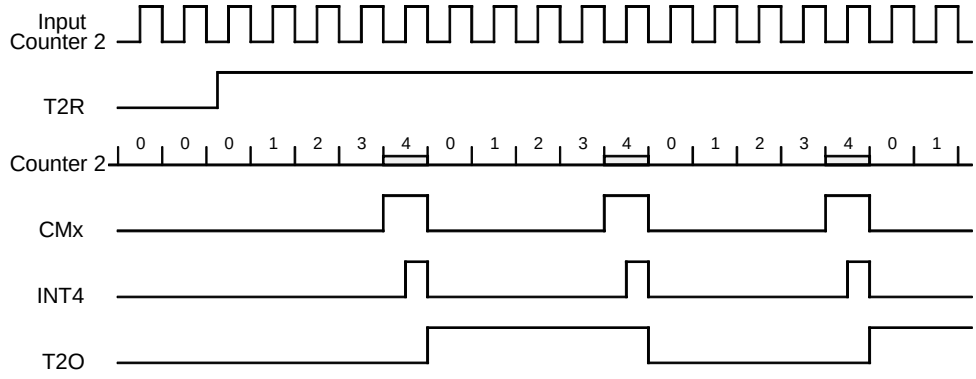

Toggle Mode B: A Timer 2 compare match toggles the output flip-flop (M2) -> T2O

Figure 42. Pulse Generator – the Timer Output Toggles with the Timer Start if the T2TS-bit Is Set

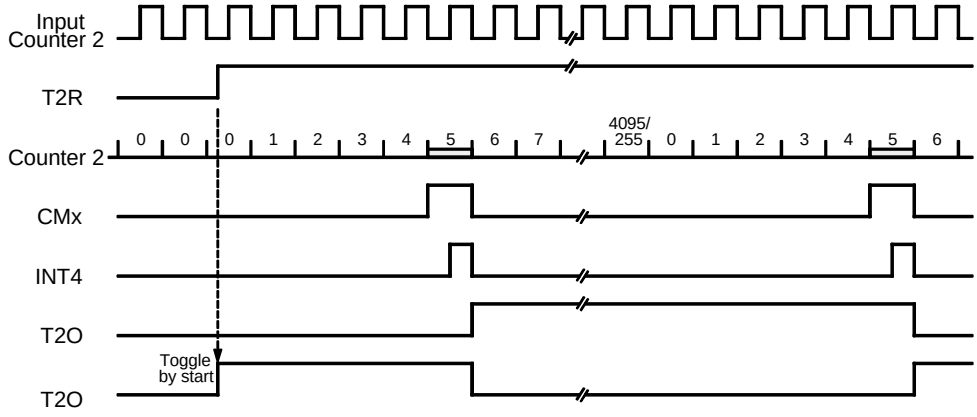

Toggle Mode C: A Timer 2 compare match toggles the output flip-flop (M2) -> T2O

Figure 43. Pulse Generator – the Timer Toggles with Timer Overflow and Compare Match

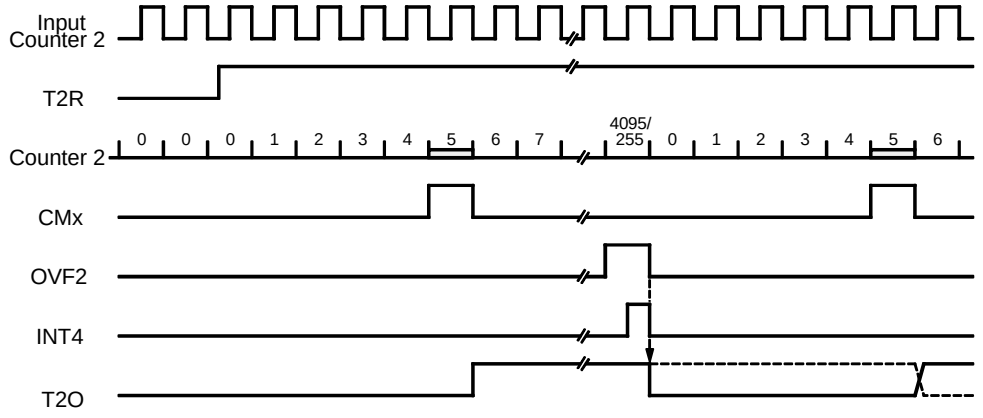

Timer 2 Output Mode 2

Duty Cycle Burst Generator 1: The DCG output signal (DCGO) is given to the output, and gated by the output flip-flop (M2)

Figure 44. Carrier Frequency Burst Modulation with Timer 2 Toggle Flip-flop Output

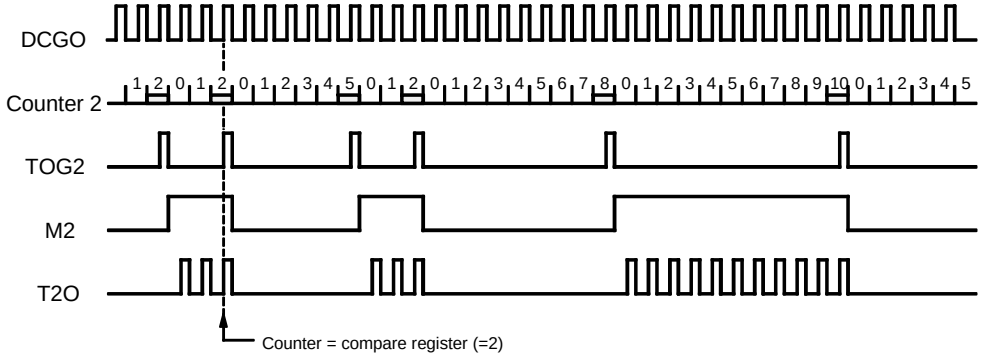

Timer 2 Output Mode 3

Duty Cycle Burst Generator 2: The DCG output signal (DCGO) is given to the output, and gated by the SSI internal data output (SO)

Figure 45. Carrier Frequency Burst Modulation with the SSI Data Output

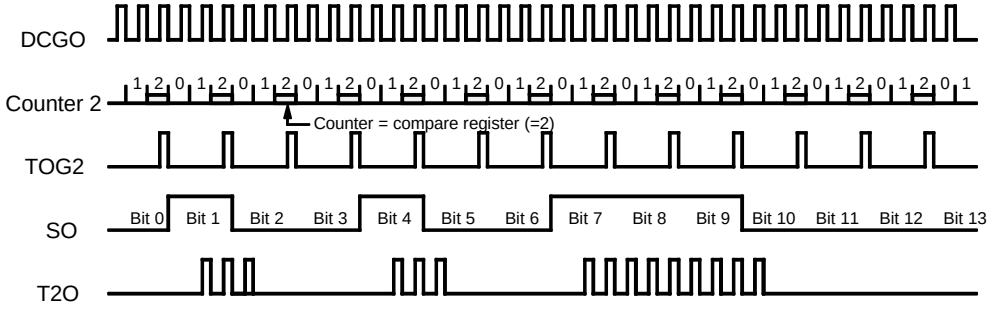

Timer 2 Output Mode 4

Biphase Modulator: Timer 2 Modulates the SSI Internal Data Output (SO) to Biphase Code.

Figure 46. Biphase Modulation

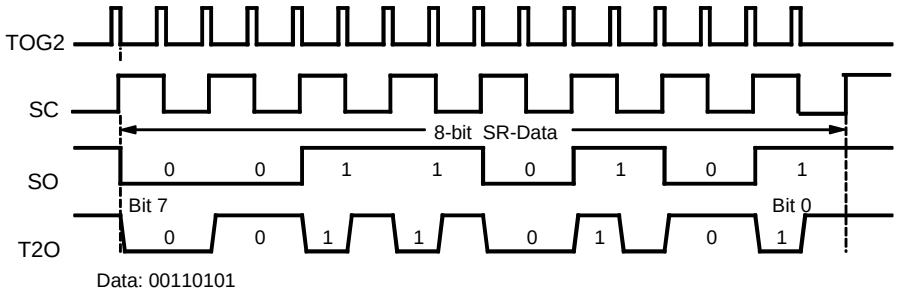

Timer 2 Output Mode 5

Manchester Modulator: Timer 2 Modulates the SSI internal data output (SO) to Manchester code

Figure 47. Manchester Modulation

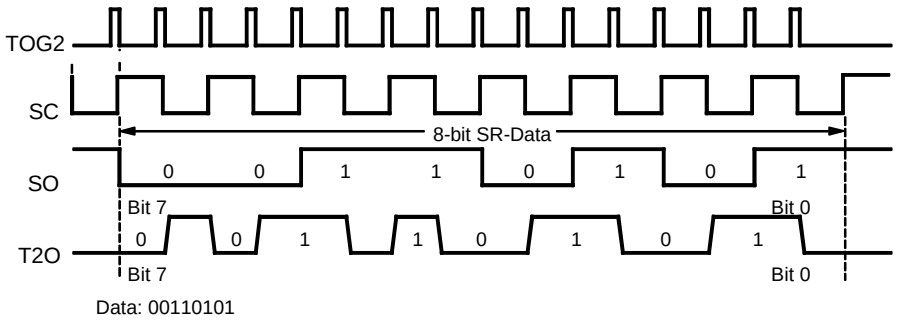

Timer 2 Output Mode 7

In this mode the timer overflow defines the period and the compare register defines the duty cycle. During one period only the first compare match occurrence is used to toggle the timer output flip-flop, until the overflow all further compare match are ignored. This avoids the situation that changing the compare register causes the occurrence of several compare match during one period. The resolution at the pulse-width modulation Timer 2 mode 1 is 12-bit and all other Timer 2 modes are 8-bit.

PWM Mode: Pulse-width modulation output on Timer 2 output pin (T2O)

Figure 48. PWM Modulation

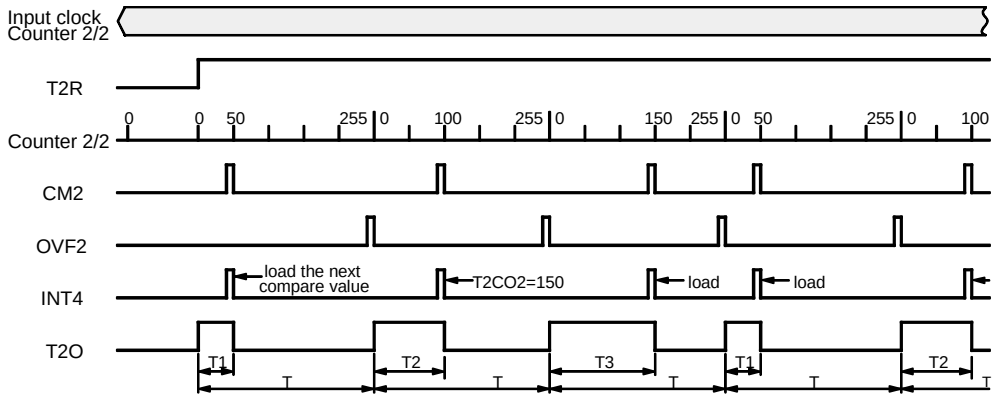

Timer 2 Registers

Timer 2 has 6 control registers to configure the timer mode, the time interval, the input clock and its output function. All registers are indirectly addressed using extended addressing as described in section "Addressing Peripherals". The alternate functions of the Ports BP41 or BP42 must be selected with the Port 4 control register P4CR, if one of the Timer 2 modes require an input at T2I/BP41 or an output at T2O/BP42.

Timer 2 Control Register (T2C)

Address: "7"hex - Subaddress: "0"hex

Bit 3	Bit 2	Bit 1	Bit 0
T2CS1	**T2CS0**	**T2TS**	**T2R**

Reset value: 0000b

T2CS1 **T**imer **2** **C**lock **S**elect bit **1**

T2CS0 **T**imer **2** **C**lock **S**elect bit **0**

T2CS1	T2CS0	Input Clock (CL 2/1) of Counter Stage 2/1
0	0	System clock (SYSCL)
0	1	Output signal of Timer 1 (T1OUT)
1	0	Internal shift clock of SSI (SCL)
1	1	Output signal of Timer 3 (TOG3)

T2TS **T**imer **2** **T**oggle with **S**tart
T2TS = 0, the output flip-flop of Timer 2 is not toggled with the timer start
T2TS = 1, the output flip-flop of Timer 2 is toggled when the timer is started with T2R

T2R **T**imer **2** **R**un
T2R = 0, Timer 2 stop and reset
T2R = 1, Timer 2 run

Timer 2 Mode Register 1 (T2M1)

Address: "7"hex - Subaddress: "1"hex

Bit 3	Bit 2	Bit 1	Bit 0
T2D1	**T2D0**	**T2MS1**	**T2MS0**

Reset value: 1111b

T2D1 **T**imer **2** **D**uty cycle bit **1**

T2D0 **T**imer **2** **D**uty cycle bit **0**

T2D1	T2D0	Function of Duty Cycle Generator (DCG)	Additional Divider Effect
1	1	Bypassed (DCGO0)	/1
1	0	Duty cycle 1/1 (DCGO1)	/2
0	1	Duty cycle 1/2 (DCGO2)	/3
0	0	Duty cycle 1/3 (DCGO3)	/4

T2MS1 **T**imer **2** **M**ode **S**elect bit **1**

T2MS0 **T**imer **2** **M**ode **S**elect bit **0**

Mode	T2MS1	T2MS0	Clock Output (POUT)	Timer 2 Modes
1	1	1	4-bit counter overflow (OVF1)	12-bit compare counter; the DCG has to be bypassed in this mode
2	1	0	4-bit compare output (CM1)	8-bit compare counter with 4-bit programmable prescaler and duty cycle generator
3	0	1	4-bit compare output (CM1)	8-bit compare counter clocked by SYSCL or the external clock input T2I, 4-bit prescaler run, the counter 2/1 starts after writing mode 3
4	0	0	4-bit compare output (CM1)	8-bit compare counter clocked by SYSCL or the external clock input T2I, 4-bit prescaler stop and resets

Duty Cycle Generator

The duty cycle generator generates duty cycles of 25%, 33% or 50%. The frequency at the duty cycle generator output depends on the duty cycle and the Timer 2 prescaler setting. The DCG-stage can also be used as additional programmable prescaler for Timer 2.

Figure 49. DCG Output Signals

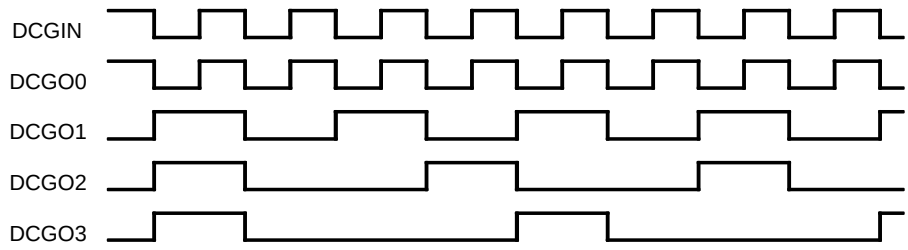

Timer 2 Mode Register 2 (T2M2)

Address: "7"hex - Subaddress: "2"hex

Bit 3	Bit 2	Bit 1	Bit 0
T2TOP	**T2OS2**	**T2OS1**	**T2OS0**

Reset value: 1111b

T2TOP **T**imer **2** **T**oggle **O**utput **P**reset
This bit allows the programmer to preset the Timer 2 output T2O.
T2TOP = 0, resets the toggle outputs with the write cycle (M2 = 0)
T2TOP = 1, sets toggle outputs with the write cycle (M2 = 1)
Note: If T2R = 1, no output preset is possible

T2OS2 **T**imer **2** **O**utput **S**elect bit **2**

T2OS1 **T**imer **2** **O**utput **S**elect bit **1**

T2OS0 **T**imer **2** **O**utput **S**elect bit **0**

Output Mode	T2OS2	T2OS1	T2OS0	Clock Output (POUT)
1	1	1	1	Toggle mode: a Timer 2 compare match toggles the output flip-flop (M2) -> T2O
2	1	1	0	Duty cycle burst generator 1: the DCG output signal (DCG0) is given to the output and gated by the output flip-flop (M2)
3	1	0	1	Duty cycle burst generator 2: the DCG output signal (DCGO) is given to the output and gated by the SSI internal data output (SO)
4	1	0	0	Biphase modulator: Timer 2 modulates the SSI internal data output (SO) to Biphase code
5	0	1	1	Manchester modulator: Timer 2 modulates the SSI internal data output (SO) to Manchester code
6	0	1	0	SSI output: T2O is used directly as SSI internal data output (SO)
7	0	0	1	PWM mode: an 8/12-bit PWM mode
8	0	0	0	Not allowed

If one of these output modes is used the T2O alternate function of Port 4 must also be activated.

Timer 2 Compare and Compare Mode Registers

Timer 2 has two separate compare registers, T2CO1 for the 4-bit stage and T2CO2 for the 8-bit stage of Timer 2. The timer compares the contents of the compare register current counter value and if it matches it generates an output signal. Dependent on the timer mode, this signal is used to generate a timer interrupt, to toggle the output flip-flop as SSI clock or as a clock for the next counter stage.

In the 12-bit timer mode, T2CO1 contains bits 0 to 3 and T2CO2 bits 4 to 11 of the 12-bit compare value. In all other modes, the two compare registers work independently as a 4- and 8-bit compare register.

When assigned to the compare register a compare event will be suppressed.

Timer 2 Compare Mode Register (T2CM)

Address: "7"hex - Subaddress: "3"hex

Bit 3	Bit 2	Bit 1	Bit 0
T2OTM	**T2CTM**	**T2RM**	**T2IM**

Reset value: 0000b

T2OTM **T**imer **2** **O**verflow **T**oggle **M**ask bit
T2OTM = 0, disable overflow toggle
T2OTM = 1, enable overflow toggle, a counter overflow (OVF2) toggles output flip-flop (TOG2). If the T2OTM-bit is set, only a counter overflow can generate an interrupt except on the Timer 2 output mode 7.

T2CTM **T**imer **2** **C**ompare **T**oggle **M**ask bit
T2CTM = 0, disable compare toggle
T2CTM = 1, enable compare toggle, a match of the counter with the compare register toggles output flip-flop (TOG2). In Timer 2 output mode 7 and when the T2CTM-bit is set, only a match of the counter with the compare register can generate an interrupt.

T2RM **T**imer **2** **R**eset **M**ask bit
T2RM = 0, disable counter reset
T2RM = 1, enable counter reset, a match of the counter with the compare register resets the counter

T2IM **T**imer **2** **I**nterrupt **M**ask bit
T2IM = 0, disable Timer 2 interrupt
T2IM = 1, enable Timer 2 interrupt

Timer 2 Output Mode	T2OTM	T2CTM	Timer 2 Interrupt Source
1, 2, 3, 4, 5 and 6	0	x	Compare match (CM2)
1, 2, 3, 4, 5 and 6	1	x	Overflow (OVF2)
7	x	1	Compare match (CM2)

Timer 2 COmpare Register 1 (T2CO1)

Address: "7"hex - Subaddress: "4"hex

Write cycle	**Bit 3**	**Bit 2**	**Bit 1**	**Bit 0**

Reset value: 1111b

In prescaler mode the clock is bypassed if the compare register T2CO1 contains 0.

Timer 2 COmpare Register 2 (T2CO2) Byte Write

Address: "7"hex - Subaddress: "5"hex

First write cycle	**Bit 3**	**Bit 2**	**Bit 1**	**Bit 0**	**Reset value: 1111b**
Second write cycle	**Bit 7**	**Bit 6**	**Bit 5**	**Bit 4**	**Reset value: 1111b**

Timer 3

Features

- **Two Compare Registers**
- **Capture Register**
- **Edge Sensitive Input with Zero Cross Detection Capability**
- **Trigger and Single Action Modes**
- **Output Control Modes**
- **Automatically Modulation and Demodulation Modes**
- **FSK Modulation**
- **Pulse width Modulation (PWM)**
- **Manchester Demodulation Together with SSI**
- **Biphase Demodulation Together with SSI**
- **Pulse-width Demodulation Together with SSI**

Figure 50. Timer 3

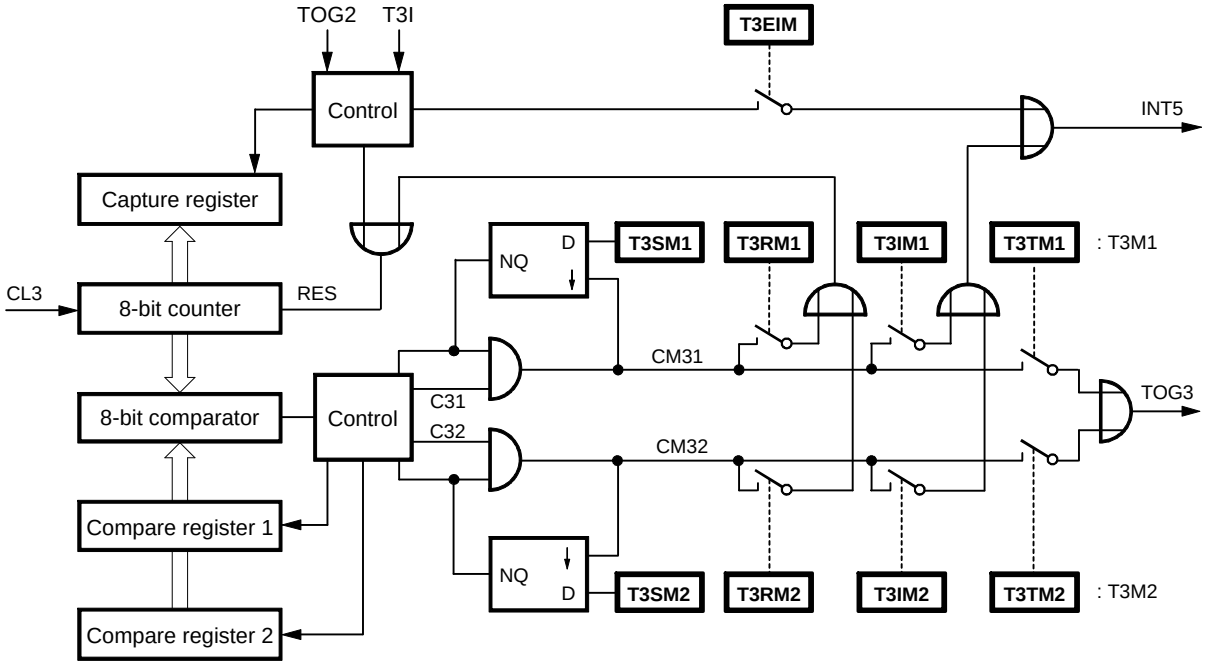

Timer 3 consists of an 8-bit up-counter with two compare registers and one capture register. The timer can be used as event counter, timer and signal generator. Its output can be programmed as modulator and demodulator for the serial interface. The two compare registers enable various modes of signal generation, modulation and demodulation. The counter can be driven by internal and external clock sources. For external clock sources, it has a programmable edge-sensitive input which can be used as counter input, capture signal input or trigger input. This timer input is synchronized with SYSCL. Therefore, in the power-down mode SLEEP (CPU core -> sleep and OSC-Stop -> yes), this timer input is stopped too. The counter is readable via its capture register while it is running. In capture mode, the counter value can be captured by a programmable capture event from the Timer 3 input or Timer 2 output.

A special feature of this timer is the trigger- and single-action mode. In trigger mode, the counter starts counting triggered by the external signal at its input. In single-action mode, the counter counts only one time up to the programmed compare match event. These modes are very useful for modulation, demodulation, signal generation, signal measurement and phase controlling. For phase controlling, the timer input is protected against negative voltages and has zero-cross detection capability.

Timer 3 has a modulator output stage and input functions for demodulation. As modulator it works together with Timer 2 or the serial interface. When the shift register is used for modulation the data shifted out of the register is encoded bitwise. In all demodulation modes, the decoded data bits are shifted automatically into the shift register.

Timer/Counter Modes

Timer 3 has 6 timer modes and 6 modulator/demodulator modes. The mode is set via the Timer 3 Mode Register T3M.

In all these modes, the compare register and the compare-mode register belonging to it define the counter value for a compare match and the action of a compare match. A match of the current counter value with the content of one compare register triggers a counter reset, a Timer 3 interrupt or the toggling of the output flip-flop. The compare mode registers T3M1 and T3M2 contain the mask bits for enabling or disabling these actions.

The counter can also be enabled to execute single actions with one or both compare registers. If this mode is set the corresponding compare match event is generated only once after the counter start.

Most of the timer modes use their compare registers alternately. After the start has been activated, the first comparison is carried out via the compare register 1, the second is carried out via the compare register 2, the third is carried out again via the compare register 1 and so on. This makes it easy to generate signals with constant periods and variable duty cycle or to generate signals with variable pulse and space widths.

If single-action mode is set for one compare register, the comparison is always carried out after the first cycle via the other compare register.

The counter can be started and stopped via the control register T3C. This register also controls the initial level of the output before start. T3C contains the interrupt mask for a T3I input interrupt.

Via the Timer 3 clock-select register, the internal or external clock source can be selected. This register selects also the active edge of the external input. An edge at the external input T3I can generate also an interrupt if the T3EIM-bit is set and the Timer 3 is stopped (T3R = 0) in the T3C-register.

Figure 51. Counter 3 Stage

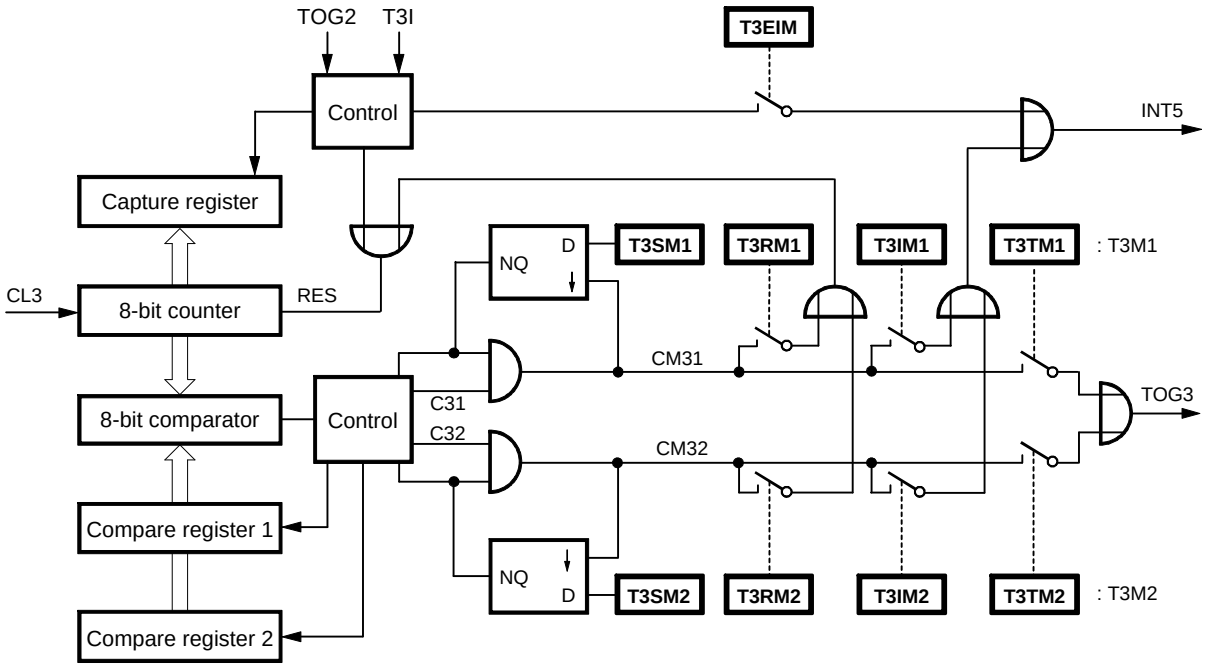

The status of the timer as well as the occurrence of a compare match or an edge detect of the input signal is indicated by the status register T2ST. This allows identification of the interrupt source because all these events share only one timer interrupt.

Timer 3 compares data values

The Timer 3 has two 8-bit compare registers (T3CO1, T3CO2). The compare data value can be ‘m’ for each of the Timer 3 compare registers.

The compare data value for the compare registers is: $m = x + 1$ $\quad 0 \leq x \leq 255$

Timer 3 – Mode 1: Timer/Counter

The selected clock from an internal or external source increments the 8-bit counter. In this mode, the timer can be used as event counter for external clocks at T3I or as timer for generating interrupts and pulses at T3O. The counter value can be read by the software via the capture register.

Figure 52. Counter Reset with Each Compare Match

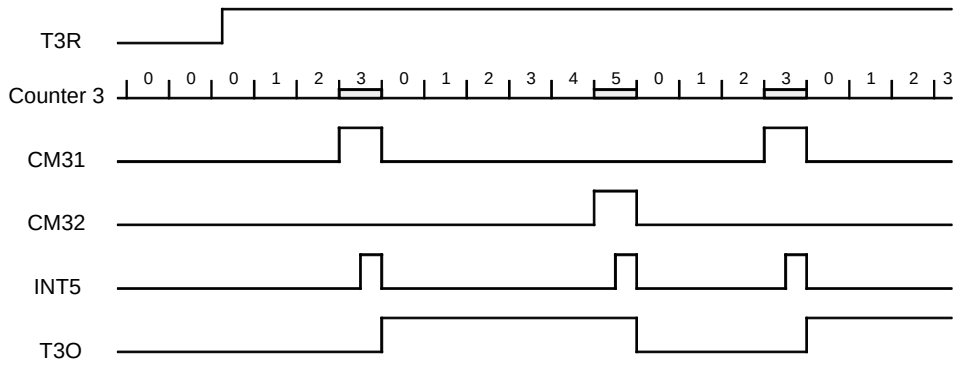

Figure 53. Counter Reset with Compare Register 2 and Toggle with Start

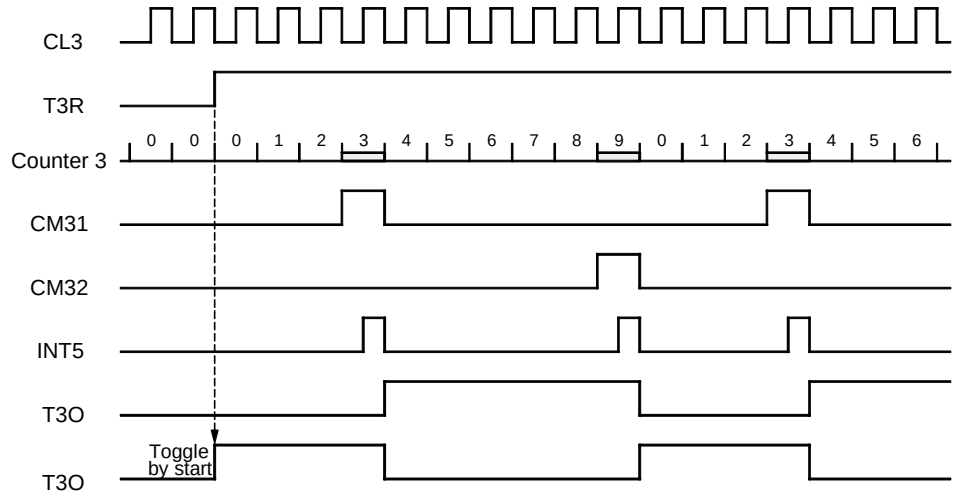

Figure 54. Single Action of Compare Register 1

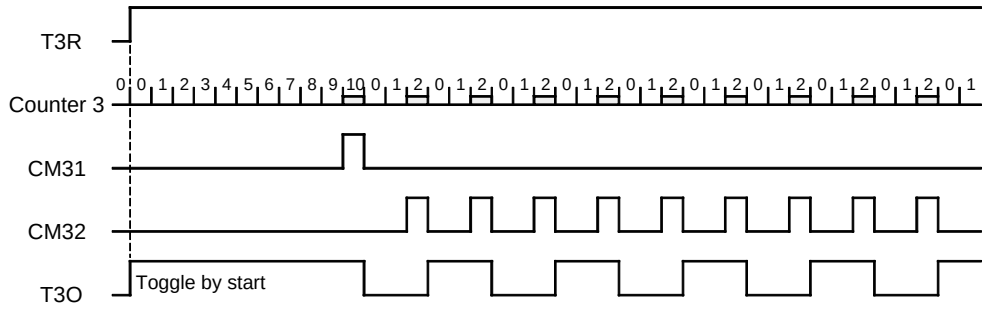

Timer 3 – Mode 2: Timer/Counter, External Trigger Restart and External Capture (with T3I Input)

The counter is driven by an internal clock source. After starting with T3R, the first edge from the external input T3I starts the counter. The following edges at T3I load the current counter value into the capture register, reset the counter and restart it. The edge can be selected by the programmable edge decoder of the timer input stage. If single-action mode is activated for one or both compare registers the trigger signal restarts the single action.

Figure 55. Externally Triggered Counter Reset and Start Combined with Single-action Mode

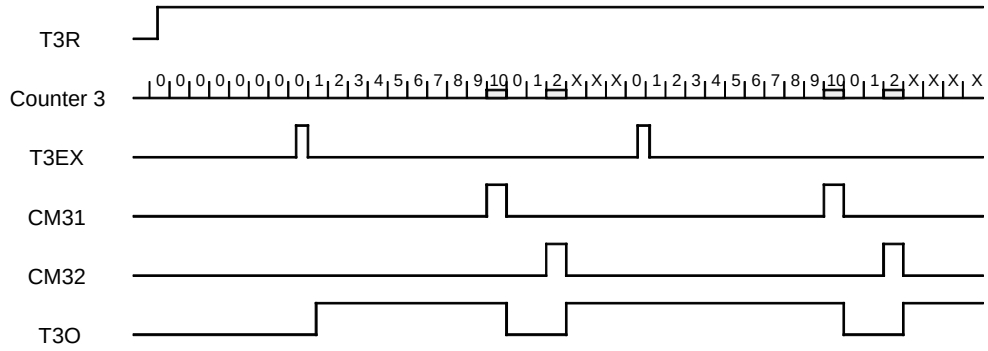

Timer 3 – Mode 3: Timer/Counter, Internal Trigger Restart and Internal Capture (with TOG2)

The counter is driven by an internal or external (T3I) clock source. The output toggle signal of Timer 2 resets the counter. The counter value before the reset is saved in the capture register. If single-action mode is activated for one ore both compare registers, the trigger signal restarts the single actions. This mode can be used for frequency measurements or as event counter with time gate (see combination mode 10).

Figure 56. Event Counter with Time Gate

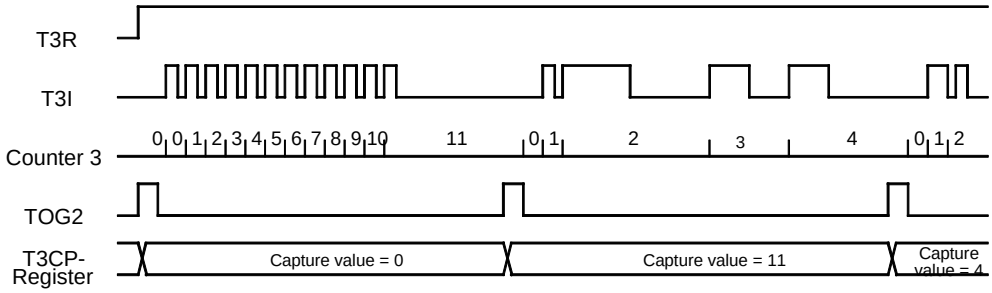

Timer 3 – Mode 4: Timer/Counter

The timer runs as timer/counter in mode 1, but its output T3O is used as output for the Timer 2 output signal.

Timer 3 – Mode 5: Timer/Counter, External Trigger Restart and External Capture (with T3I Input)

The Timer 3 runs as timer/counter in mode 2, but its output T3O is used as output for the Timer 2 output signal.

Timer 3 Modulator/Demodulator Modes

Timer 3 – Mode 6: Carrier Frequency Burst Modulation Controlled by Timer 2 Output Toggle Flip-Flop (M2)

The Timer 3 counter is driven by an internal or external clock source. Its compare- and compare mode registers must be programmed to generate the carrier frequency via the output toggle flip-flop. The output toggle flip-flop of Timer 2 is used to enable or disable the Timer 3 output. Timer 2 can be driven by the toggle output signal of Timer 3 or any other clock source (see combination mode 11).

Timer 3 – Mode 7: Carrier Frequency Burst Modulation Controlled by SSI Internal Output (SO)

The Timer 3 counter is driven by an internal or external clock source. Its compare- and compare mode registers must be programmed to generate the carrier frequency via the output toggle flip-flop. The output (SO) of the SSI is used to enable or disable the Timer 3 output. The SSI should be supplied with the toggle signal of Timer 2 (see combination mode 12).

Timer 3 – Mode 8: FSK Modulation with Shift Register Data (SO)

The two compare registers are used for generating two different time intervals. The SSI internal data output (SO) selects which compare register is used for the output frequency generation. A "0" level at the SSI data output enables the compare register 1. A "1" level enables compare register 2. The compare- and compare-mode registers must be programmed to generate the two frequencies via the output toggle flip-flop. The SSI can be supplied with the toggle signal of Timer 2. The Timer 3 counter is driven by an internal or external clock source. The Timer 2 counter is driven by the Counter 3 (TOG3) (see also combination mode 13).

Figure 57. FSK Modulation

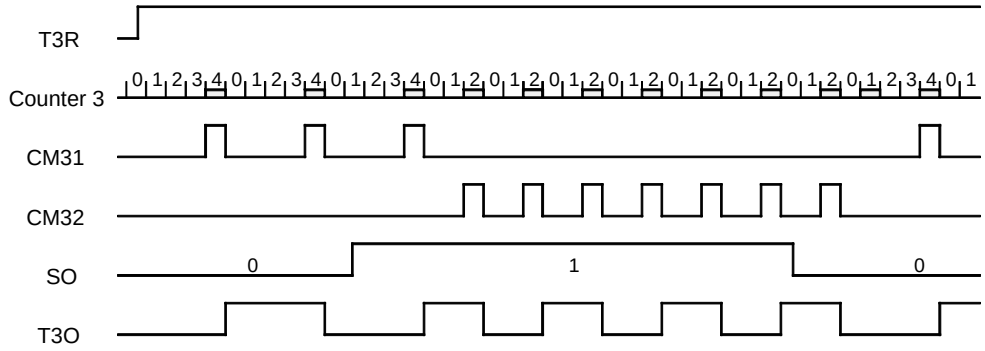

Timer 3 – Mode 9: Pulse-width Modulation with the Shift Register

The two compare registers are used for generating two different time intervals. The SSI internal data output (SO) selects which compare register is used for the output pulse generation. In this mode both compare- and compare-mode registers must be programmed for generating the two pulse widths. It is also useful to enable the single-action mode for extreme duty cycles. Timer 2 is used as baudrate generator and for the trigger restart of Timer 3. The SSI must be supplied with a toggle signal of Timer 2. The counter is driven by an internal or external clock source (see combination mode 7).

Figure 58. Pulse-width Modulation

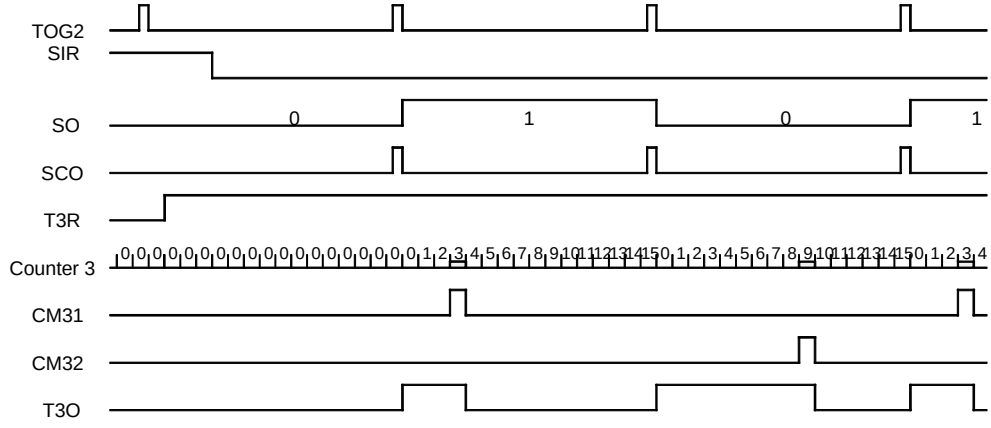

Timer 3 – Mode 10: Manchester Demodulation/Pulse-width Demodulation

For Manchester demodulation, the edge detection stage must be programmed to detect each edge at the input. These edges are evaluated by the demodulator stage. The timer stage is used to generate the shift clock for the SSI. The compare register 1 match event defines the correct moment for shifting the state from the input T3I as the decoded bit into shift register - after that the demodulator waits for the next edge to synchronize the timer by a reset for the next bit. The compare register 2 can also be used to detect a time-out error and handle it with an interrupt routine (see also combination mode 8).

Figure 59. Manchester Demodulation

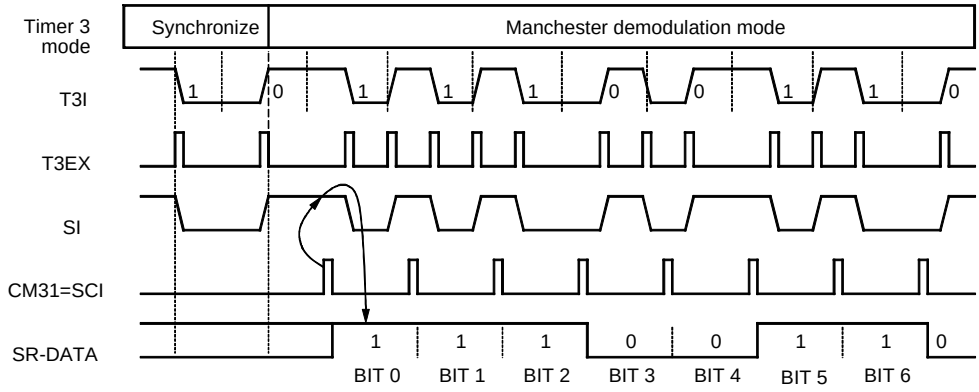

Timer 3 – Mode 11: Biphase Demodulation

In the Biphase demodulation mode, the timer operates like in Manchester demodulation mode. The difference is that the bits are decoded via a toggle flip-flop. This flip-flop samples the edge in the middle of the bitframe and the compare register 1 match event shifts the toggle flip-flop output into shift register (see also combined mode 9).

Figure 60. Biphase Demodulation

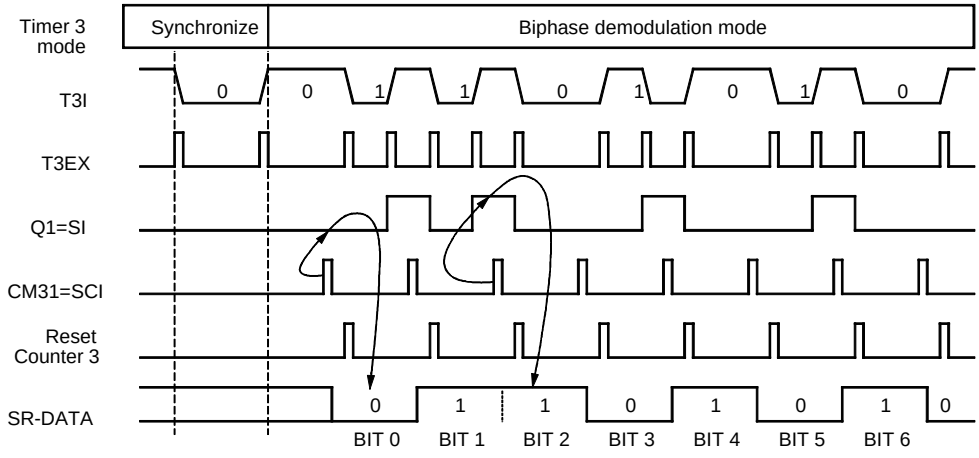

Timer 3 – Mode 12: Timer/Counter with External Capture Mode (T3I)

The counter is driven by an internal clock source and an edge at the external input T3I loads the counter value into the capture register. The edge can be selected with the programmable edge detector of the timer input stage. This mode can be used for signal and pulse measurements.

Figure 61. External Capture Mode

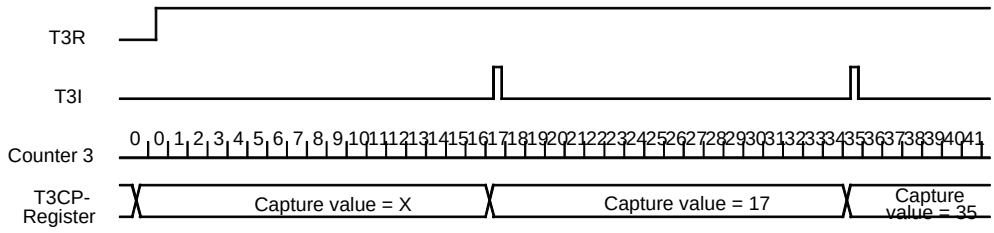

Timer 3 Modulator for Carrier Frequency Burst Modulation

If the output stage operates as pulse-width modulator for the shift register, the output can be stopped with stage 1 of Timer 2. For this task, the timer mode 3 must be used and the prescaler must be supplied by the internal shift clock of the shift register.

The modulator can be started with the start of the shift register (SIR = 0) and stopped either by a shift register stop (SIR = 1) or compare match event of stage 1 of Timer 2. For this task, the Timer 2 must be used in mode 3 and the prescaler stage must be supplied by the internal shift clock of the shift register.

Figure 62. Modulator 3

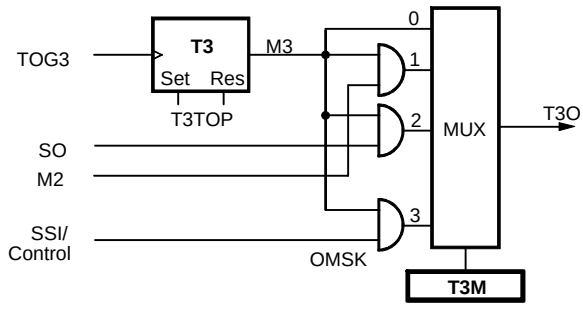

Timer 3 Mode	T3O
6	MUX 1
7	MUX 2
9	MUX 3
other	MUX 0

Timer 3 Demodulator for Biphase, Manchester and Pulse-width-modulated Signals

The demodulator stage of Timer 3 can be used to decode Biphase, Manchester and pulse-width-coded signals.

Figure 63. Timer 3 Demodulator 3

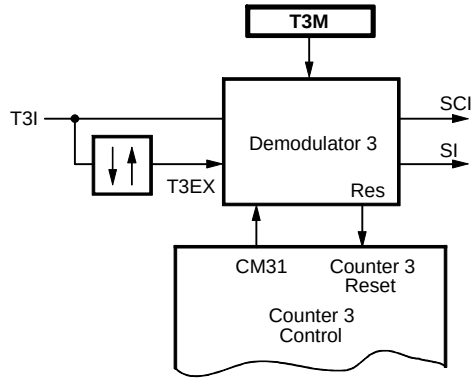

Timer 3 Registers

Timer 3 Mode Register (T3M)

Address: "B"hex - Subaddress: "0"hex

Bit 3	Bit 2	Bit 1	Bit 0
T3M3	**T3M2**	**T3M1**	**T3M0**

Reset value: 1111b

T3M3 **T**imer **3** **M**ode select bit **3**

T3M2 **T**imer **3** **M**ode select bit **2**

T3M1 **T**imer **3** **M**ode select bit **1**

T3M0 **T**imer **3** **M**ode select bit **0**

Mode	T3M3	T3M2	T3M1	T3M0	Timer 3 Modes
1	1	1	1	1	Timer/counter with a read access
2	1	1	1	0	Timer/counter, external capture and external trigger restart mode (T3I)
3	1	1	0	1	Timer/counter, internal capture and internal trigger restart mode (TOG2)
4	1	1	0	0	Timer/counter mode 1 without output (T2O -> T3O)
5	1	0	1	1	Timer/counter mode 2 without output (T2O -> T3O)
6	1	0	1	0	Burst modulation with Timer 2 (M2)
7	1	0	0	1	Burst modulation with shift register (SO)
8	1	0	0	0	FSK modulation with shift register (SO)
9	0	1	1	1	Pulse-width modulation with shift register (SO) and Timer 2 (TOG2), internal trigger restart (SCO) -> counter reset
10	0	1	1	0	Manchester demodulation/pulse-width demodulation (1) (T2O -> T3O)
11	0	1	0	1	Biphase demodulation (T2O -> T3O)
12	0	1	0	0	Timer/counter with external capture mode (T3I)
13	0	0	1	1	Not allowed
14	0	0	1	0	Not allowed
15	0	0	0	1	Not allowed
16	0	0	0	0	Not allowed

Note: 1. In this mode, the SSI can be used only as demodulator (8-bit NRZ rising edge). All other SSI modes are not allowed.

Timer 3 Control Register 1 (T3C) Write

Primary register address: "C"hex - Write

	Bit 3	Bit 2	Bit 1	Bit 0	
Write	**T3EIM**	**T3TOP**	**T3TS**	**T3R**	**Reset value: 0000b**

T3EIM **T**imer **3** **E**dge **I**nterrupt **M**ask
T3EIM = 0, disables the interrupt when an edge event for Timer 3 occurs (T3I)
T3EIM = 1, enables the interrupt when an edge event for Timer 3 occurs (T3I)

T3TOP **T**imer **3** **T**oggle **O**utput **P**reset T3TOP = 0, sets toggle output (M3) to "0"
T3TOP = 1, sets toggle output (M3) to "1"
Note: If T3R = 1, no output preset is possible

T3TS **T**imer **3** **T**oggle with **S**tart T3TS = 0, Timer 3 output is not toggled during the start
T3TS = 1, Timer 3 output is toggled if started with T3R

T3R **T**imer **3** **R**un T3R = 0, Timer 3 stop and reset
T3R = 1, Timer 3 run

Timer 3 Status Register 1 (T3ST) Read

Primary register address: "C"hex - Read

	Bit 3	Bit 2	Bit 1	Bit 0	
Read	**- - -**	**T3ED**	**T3C2**	**T3C1**	**Reset value: x000b**

T3ED **T**imer **3** **E**dge **D**etect
This bit will be set by the edge-detect logic of Timer 3 input (T3I)

T3C2 **T**imer **3** **C**ompare **2**
This bit will be set when a match occurs between Counter 3 and T3CO2

T3C1 **T**imer **3** **C**ompare **1**
This bit will be set when a match occurs between Counter 3 and T3CO1

Note: The status bits T3C1, T3C2 and T3ED will be reset after a READ access to T3ST.

Timer 3 Clock Select Register (T3CS)

Address: "B"hex - Subaddress: "1"hex

	Bit 3	Bit 2	Bit 1	Bit 0	
T3CS	**T3E1**	**T3E0**	**T3CS1**	**T3CS0**	**Reset value: 1111b**

T3E1 **T**imer **3** **E**dge select bit **1**

T3E0 **T**imer **3** **E**dge select bit **0**

T3E1	T3E0	Timer 3 Input Edge Select (T3I)
1	1	- - -
1	0	Positive edge at T3I pin
0	1	Negative edge at T3I pin
0	0	Each edge at T3I pin

T3CS1 **T**imer **3** **C**lock **S**ource select bit **1**

T3CS0 **T**imer **3** **C**lock **S**ource select bit **0**

T3CS1	TCS0	Counter 3 Input Signal (CL3)
1	1	System clock (SYSCL)
1	0	Output signal of Timer 2 (POUT)
0	1	Output signal of Timer 1 (T1OUT)
0	0	External input signal from T3I edge detect

Timer 3 Compare- and Compare-mode Register

Timer 3 has two separate compare registers T3CO1 and T3CO2 for the 8-bit stage of Timer 3. The timer compares the content of the compare register with the current counter value. If both match, it generates a signal. This signal can be used for the counter reset, to generate a timer interrupt, for toggling the output flip-flop, as SSI clock or as clock for the next counter stage. For each compare register, a compare-mode register exists. These registers contain mask bits to enable or disable the generation of an interrupt, a counter reset, or an output toggling with the occurrence of a compare match of the corresponding compare register. The mask bits for activating the single-action mode can also be located in the compare mode registers. When assigned to the compare register a compare event will be suppressed.

Timer 3 Compare-Mode Register 1 (T3CM1)

Address: "B"hex - Subaddress: "2"hex

	Bit 3	Bit 2	Bit 1	Bit 0	
T3CM1	**T3SM1**	**T3TM1**	**T3RM1**	**T3IM1**	**Reset value: 0000b**

T3SM1 **T**imer **3** **S**ingle action **M**ask bit **1**
T3SM1 = 0, disables single-action compare mode
T3SM1 = 1, enables single-compare mode. After this bit is set, the compare register (T3CO1) is used until the next compare match.

T3TM1 **T**imer **3** compare **T**oggle action **M**ask bit **1**
T3TM1 = 0, disables compare toggle
T3TM1 = 1, enables compare toggle. A match of Counter 3 with the compare register (T3CO1) toggles the output flip-flop (TOG3).

T3RM1 **T**imer **3** **R**eset **M**ask bit **1**
T3RM1 = 0, disables counter reset
T3RM1 = 1, enables counter reset. A match of Counter 3 with the compare register (T3CO1) resets the Counter 3.

T3IM1 **T**imer **3** **I**nterrupt **M**ask bit **1**
T3RM1 = 0, disables Timer 3 interrupt for T3CO1 register.
T3RM1 = 1, enables Timer 3 interrupt for T3CO1 register.

T3CM1 contains the mask bits for the match event of the Counter 3 compare register 1

Timer 3 Compare Mode Register 2 (T3CM2)

Address: "B"hex - Subaddress: "3"hex

	Bit 3	Bit 2	Bit 1	Bit 0	
T3CM2	**T3SM2**	**T3TM2**	**T3RM2**	**T3IM2**	**Reset value: 0000b**

T3SM2 **T**imer **3** **S**ingle action **M**ask bit **2**
T3SM2 = 0, disables single-action compare mode
T3SM2 = 1, enables single-compare mode. After this bit is set, the compare register (T3CO2) is used until the next compare match.

T3TM2 **T**imer **3** compare **T**oggle action **M**ask bit **2**
T3TM2 = 0, disables compare toggle
T3TM2 = 1, enables compare toggle. A match of Counter 3 with the compare register (T3CO2) toggles the output flip-flop (TOG3).

T3RM2 **T**imer **3** **R**eset **M**ask bit **2**
T3RM2 = 0, disables counter reset
T3RM2 = 1, enables counter reset. A match of Counter 3 with the compare register (T3CO2) resets the Counter 3.

T3IM2 **T**imer **3** **I**nterrupt **M**ask bit **2**
T3RM2 = 0, disables Timer 3 interrupt for T3CO2 register.
T3RM2 = 1, enables Timer 3 interrupt for T3CO2 register.

T3CM2 contains the mask bits for the match event of Counter 3 compare register 2

The compare registers and corresponding counter reset masks can be used to program the counter time intervals and the toggle masks can be used to program output signal. The single-action mask can also be used in this mode. It starts operating after the timer started with T3R.

Timer 3 COmpare Register 1 (T3CO1) Byte Write

Address: "B"hex - Subaddress: "4"hex

	High Nibble				
Second write cycle	**Bit 7**	**Bit 6**	**Bit 5**	**Bit 4**	**Reset value: 1111b**

	Low Nibble				
First write cycle	**Bit 3**	**Bit 2**	**Bit15**	**Bit 0**	**Reset value: 1111b**

Timer 3 COmpare Register 2 (T3CO2) Byte Write

Address: "B"hex - Subaddress: "5"hex

	High Nibble				
Second write cycle	**Bit 7**	**Bit 6**	**Bit 5**	**Bit 4**	**Reset value: 1111b**

	Low Nibble				
First write cycle	**Bit 3**	**Bit 2**	**Bit15**	**Bit 0**	**Reset value: 1111b**

Timer 3 Capture Register

The counter content can be read via the capture register. There are two ways to use the capture register. In modes 1 and 4, it is possible to read the current counter value directly out of the capture register. In the capture modes 2, 3, 5 and 12, a capture event like an edge at the Timer 3 input or a signal from Timer 2 stores the current counter value into the capture register. This counter value can be read from the capture register.

Timer 3 CaPture Register (T3CP) Byte Read

Address: "B"hex - Subaddress: "4"hex

	High Nibble				
First read cycle	**Bit 7**	**Bit 6**	**Bit 5**	**Bit 4**	**Reset value: xxxxb**

	Low Nibble				
Second read cycle	**Bit 3**	**Bit 2**	**Bit15**	**Bit 0**	**Reset value: xxxxb**

Synchronous Serial Interface (SSI)

SSI Features:

- With Timer 1:
  - 2- and 3-wire NRZ
  - 2-wire mode multi-chip link mode (MCL), additional internal 2-wire link for multi-chip packaging solutions
- With Timer 2:
  - Biphase modulation
  - Manchester modulation
  - Pulse-width demodulation
  - Burst modulation
- With Timer 3:
  - Pulse-width modulation (PWM)
  - FSK modulation
  - Biphase demodulation
  - Manchester demodulation
  - Pulse-width demodulation
  - Pulse position Demodulation

SSI Peripheral Configuration

The synchronous serial interface (SSI) can be used either for serial communication with external devices such as EEPROMs, shift registers, display drivers, other microcontrollers, or as a means for generating and capturing on-chip serial streams of data. External data communication takes place via the Port 4 (BP4),a multi-functional port which can be software configured by writing the appropriate control word into the P4CR register. The SSI can be configured in any of the following ways:

1. 2-wire external interface for bi-directional data communication with one data terminal and one shift clock. The SSI uses the Port BP43 as a bi-directional serial data line (SD) and BP40 as shift clock line (SC).
2. 3-wire external interface for simultaneous input and output of serial data, with a serial input data terminal (SI), a serial output data terminal (SO) and a shift clock (SC). The SSI uses BP40 as shift clock (SC), while the serial data input (SI) is applied to BP43 (configured in P4CR as input!). Serial output data (SO) in this case is passed through to BP42 (configured in P4CR to T2O) via the Timer 2 output stage (T2M2 configured in mode 6).
3. Timer/SSI combined modes – the SSI used together with Timer 2 or Timer 3 is capable of performing a variety of data modulation and demodulation functions (see Timer Section). The modulating data is converted by the SSI into a continuous serial stream of data which is in turn modulated in one of the timer functional blocks. Serial demodulated data can be serially captured in the SSI and read by the controller. In the Timer 3 modes 10 and 11 (demodulation modes) the SSI can only be used as demodulator.
4. Multi-chip link (MCL) – the SSI can also be used as an interchip data interface for use in single package multi-chip modules or hybrids. For such applications, the SSI is provided with two dedicated pads (MCL_SD and MCL_SC) which act as a two-wire chip-to-chip link. The MCL can be activated by the MCL control bit. Should these MCL pads be used by the SSI, the standard SD and SC pins are not required and the corresponding Port 4 ports are available as conventional data ports.

Figure 64. Block Diagram of the Synchronous Serial Interface

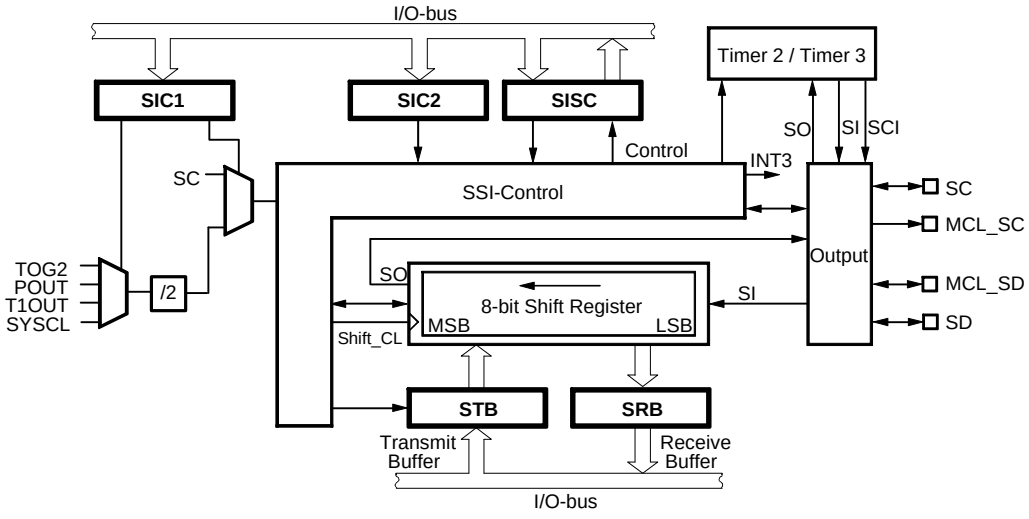

General SSI Operation

The SSI is comprised essentially of an 8-bit shift register with two associated 8-bit buffers – the receive buffer (SRB) for capturing the incoming serial data and a transmit buffer (STB) for intermediate storage of data to be serially output. Both buffers are directly accessable by software. Transferring the parallel buffer data into and out of the shift register is controlled automatically by the SSI control, so that both single byte transfers or continuous bit streams can be supported.

The SSI can generate the shift clock (SC) either from one of several on-chip clock sources or accept an external clock. The external shift clock is output on, or applied to the Port BP40. Selection of an external clock source is performed by the Serial Clock Direction control bit (SCD). In the combinational modes, the required clock is selected by the corresponding timer mode.

The SSI can operate in three data transfer modes – synchronous 8-bit shift mode, a 9-bit Multi-Chip Link Mode (MCL), or 8-bit pseudo MCL protocol (without acknowledge-bit).

External SSI clocking is not supported in these modes. The SSI should thus generate and has full control over the shift clock so that it can always be regarded as an MCL bus master device.

All directional control of the external data port used by the SSI is handled automatically and is dependent on the transmission direction set by the Serial Data Direction (SDD) control bit. This control bit defines whether the SSI is currently operating in Transmit (TX) mode or Receive (RX) mode.

Serial data is organized in 8-bit telegrams which are shifted with the most significant bit first. In the 9-bit MCL mode, an additional acknowledge bit is appended to the end of the telegram for handshaking purposes (see MCL protocol).

At the beginning of every telegram, the SSI control loads the transmit buffer into the shift register and proceeds immediately to shift data serially out. At the same time, incoming data is shifted into the shift register input. This incoming data is automatically loaded into the receive buffer when the complete telegram has been received. Thus, data can be simultaneously received and transmitted if required.

Before data can be transferred, the SSI must first be activated. This is performed by means of the SSI reset control (SIR) bit. All further operation then depends on the data directional mode (TX/RX) and the present status of the SSI buffer registers shown by the Serial Interface Ready Status Flag (SRDY). This SRDY flag indicates the (empty/full) status of either the transmit buffer (in TX mode), or the receive buffer (in RX mode). The control logic ensures that data shifting is temporarily halted at any time, if the appropriate receive/transmit buffer is not ready (SRDY = 0). The SRDY status will then automatically be set back to ‘1’ and data shifting resumed as soon as the application software loads the new data into the transmit register (in TX mode) or frees the shift register by reading it into the receive buffer (in RX mode).

A further activity status (ACT) bit indicates the present status of the serial communication. The ACT bit remains high for the duration of the serial telegram or if MCL stop or start conditions are currently being generated. Both the current SRDY and ACT status can be read in the SSI status register. To deactivate the SSI, the SIR bit must be set high.

8-bit Synchronous Mode

Figure 65. 8-bit Synchronous Mode

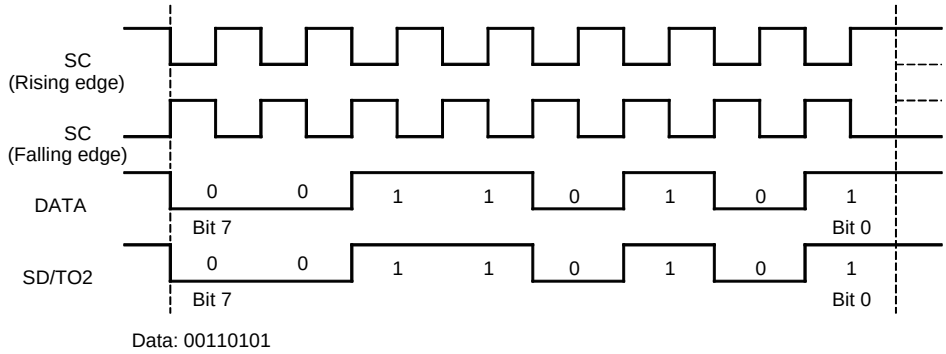

In the 8-bit synchronous mode, the SSI can operate as either a 2- or 3-wire interface (see SSI peripheral configuration). The serial data (SD) is received or transmitted in NRZ format, synchronized to either the rising or falling edge of the shift clock (SC). The choice of clock edge is defined by the Serial Mode Control bits (SM0,SM1). It should be noted that the transmission edge refers to the SC clock edge with which the SD changes. To avoid clock skew problems, the incoming serial input data is shifted in with the opposite edge.

When used together with one of the timer modulator or demodulator stages, the SSI must be set in the 8-bit synchronous mode 1.

In RX mode, as soon as the SSI is activated (SIR = 0), 8 shift clocks are generated and the incoming serial data is shifted into the shift register. This first telegram is automatically transferred into the receive buffer and the SRDY set to 0 indicating that the receive buffer contains valid data. At the same time an interrupt (if enabled) is generated. The SSI then continues shifting in the following 8-bit telegram. If, during this time the first telegram has been read by the controller, the second telegram will also be transferred in the same way into the receive buffer and the SSI will continue clocking in the next telegram. Should, however, the first telegram not have been read (SRDY = 1), then the SSI will stop, temporarily holding the second telegram in the shift register until a certain point of time when the controller is able to service the receive buffer. In this way no data is lost or overwritten.

Deactivating the SSI (SIR = 1) in mid-telegram will immediately stop the shift clock and latch the present contents of the shift register into the receive buffer. This can be used for clocking in a data telegram of less than 8 bits in length. Care should be taken to read out the final complete 8-bit data telegram of a multiple word message before deactivating the SSI (SIR = 1) and terminating the reception. After termination, the shift register contents will overwrite the receive buffer.

Figure 66. Example of 8-bit Synchronous Transmit Operation

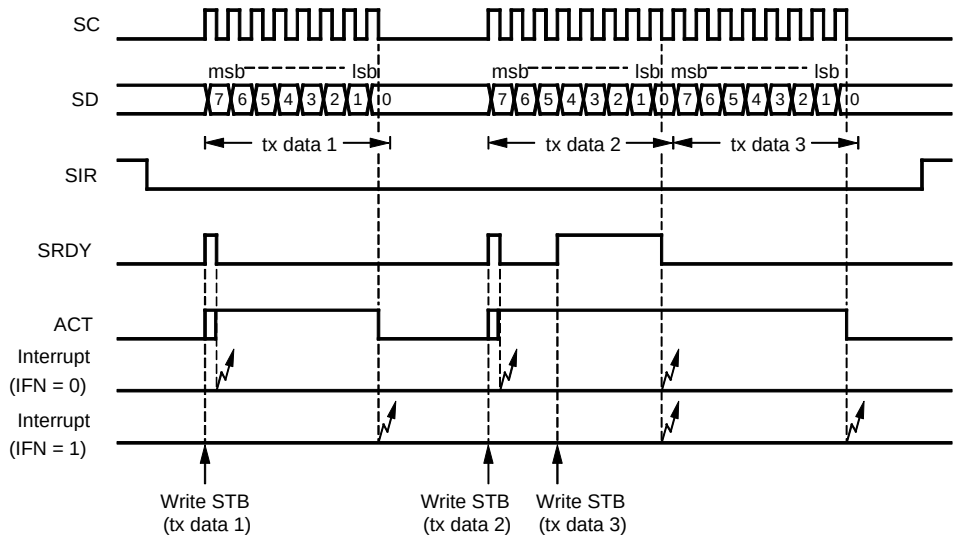

Figure 67. Example of 8-bit Synchronous Receive Operation

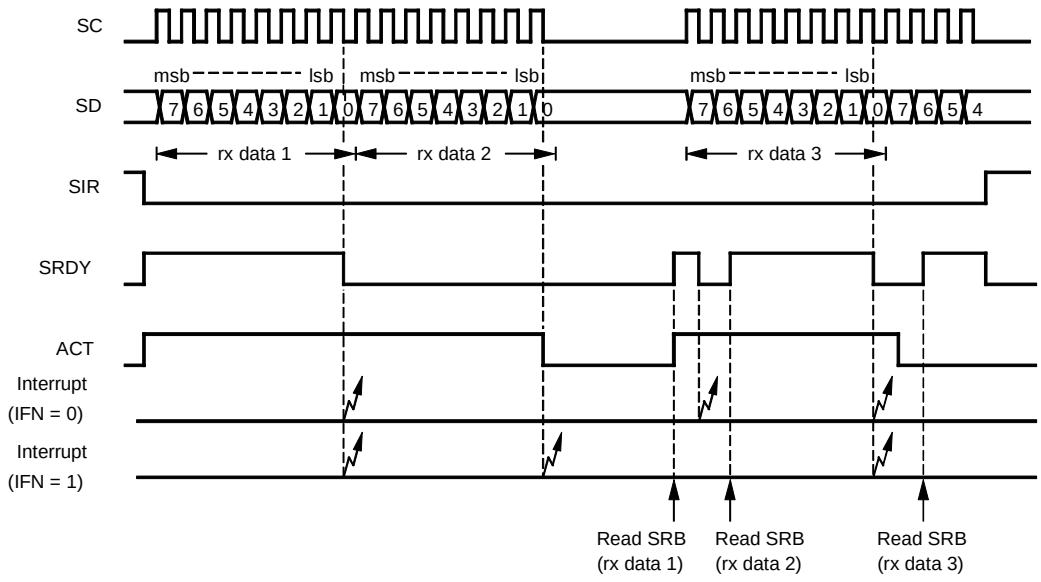

9-bit Shift Mode (MCL)

In the 9-bit shift mode, the SSI is able to handle the MCL protocol (described below). It always operates as an MCL master device, i.e., SC is always generated and output by the SSI. Both the MCL start and stop conditions are automatically generated whenever the SSI is activated or deactivated by the SIR-bit. In accordance with the MCL protocol, the output data is always changed in the clock low phase and shifted in on the high phase.

Before activating the SSI (SIR = 0) and commencing an MCL dialog, the appropriate data direction for the first word must be set using the SDD control bit. The state of this bit controls the direction of the data port (BP43 or MCL_SD). Once started, the 8 data bits are, depending on the selected direction, either clocked into or out of the shift register. During the 9th clock period, the port direction is automatically switched over so that the corresponding acknowledge bit can be shifted out or read in. In transmit mode, the acknowledge bit received from the device is captured in the SSI Status Register (TACK) where it can be read by the controller. In receive mode, the state of the acknowledge bit to be returned to the device is predetermined by the SSI Status Register (RACK).

Changing the directional mode (TX/RX) should not be performed during the transfer of an MCL telegram. One should wait until the end of the telegram which can be detected using the SSI interrupt (IFN =1) or by interrogating the ACT status.

Once started, a 9-bit telegram will always run to completion and will not be prematurely terminated by the SIR bit. So, if the SIR-bit is set to ‘1’ in telegram, the SSI will complete the current transfer and terminate the dialog with an MCL stop condition.

Figure 68. Example of MCL Transmit Dialog

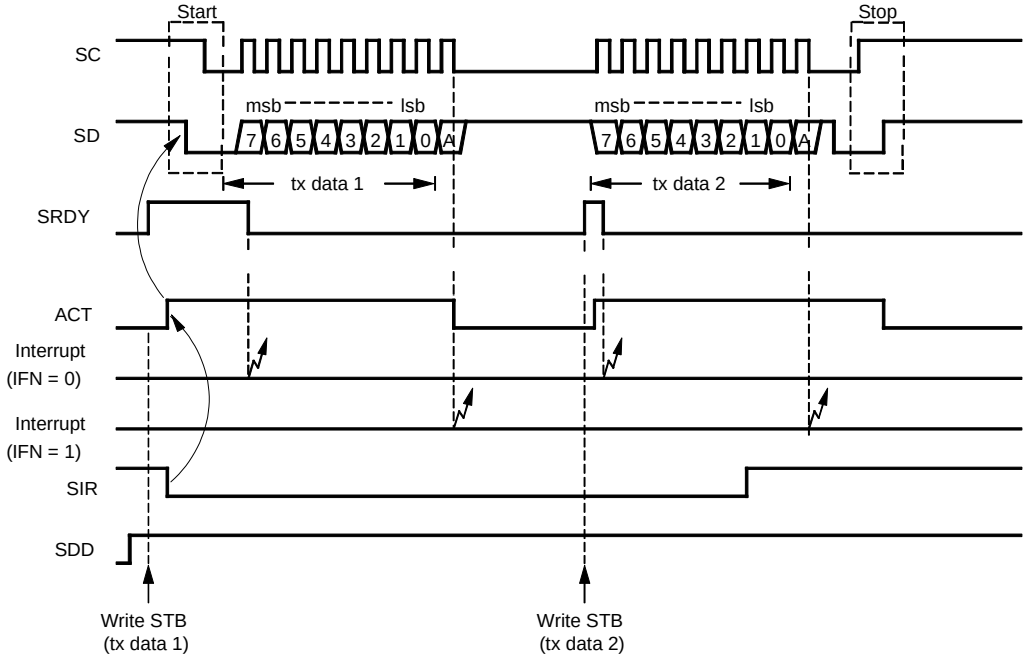

Figure 69. Example of MCL Receive Dialog

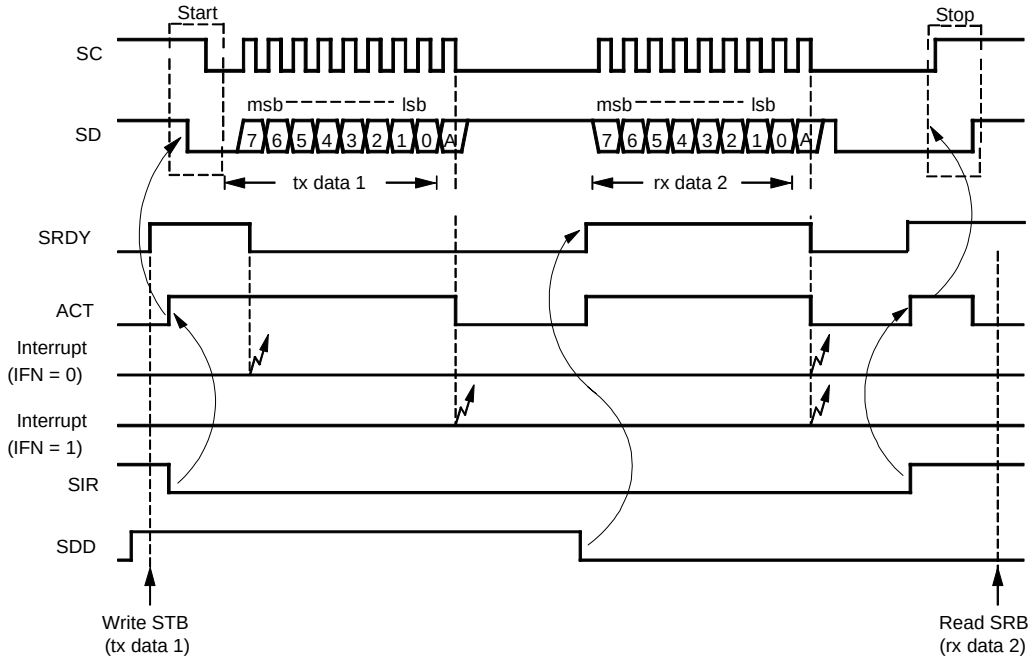

8-bit Pseudo MCL Mode

In this mode, the SSI exhibits all the typical MCL operational features except for the acknowledge-bit which is never expected or transmitted.

MCL Bus Protocol

The MCL protocol constitutes a simple 2-wire bi-directional communication highway via which devices can communicate control and data information. Although the MCL protocol can support multi-master bus configurations, the SSI in MCL mode is intended for use purely as a master controller on a single master bus system. So all reference to multiple bus control and bus contention will be omitted at this point.

All data is packaged into 8-bit telegrams plus a trailing handshaking or acknowledge-bit. Normally the communication channel is opened with a so-called start condition, which initializes all devices connected to the bus. This is then followed by a data telegram, transmitted by the master controller device. This telegram usually contains an 8-bit address code to activate a single slave device connected onto the MCL bus. Each slave receives this address and compares it with its own unique address. The addressed slave device, if ready to receive data, will respond by pulling the SD line low during the 9th clock pulse. This represents a so-called MCL acknowledge. The controller detecting this affirmative acknowledge then opens a connection to the required slave. Data can then be passed back and forth by the master controller, each 8-bit telegram being acknowledged by the respective recipient. The communication is finally closed by the master device and the slave device put back into standby by applying a stop condition onto the bus.

Figure 70. MCL Bus Protocol 1

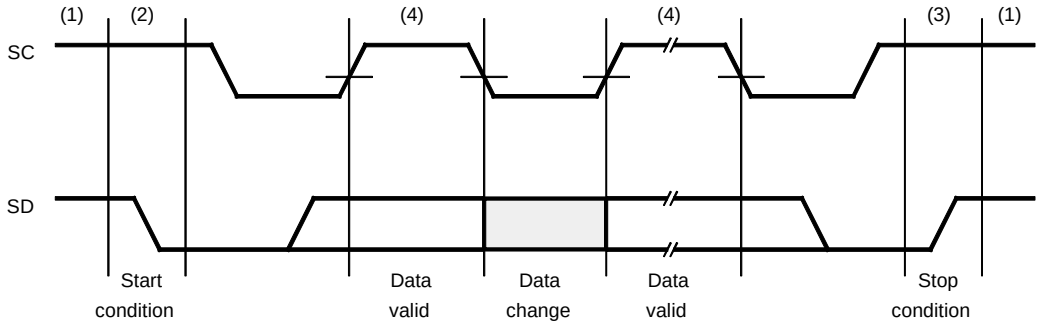

Bus not busy (1) Both data and clock lines remain HIGH.

Start data transfer (2) A HIGH to LOW transition of the SD line while the clock (SC) is HIGH defines a START condition

Stop data transfer (3) A LOW to HIGH transition of the SD line while the clock (SC) is HIGH defines a STOP condition.

Data valid (4) The state of the data line represents valid data when, after START condition, the data line is stable for the duration of the HIGH period of the clock signal.

Acknowledge All address and data words are serially transmitted to and from the device in eight-bit words. The receiving device returns a zero on the data line during the ninth clock cycle to acknowledge word receipt.

Figure 71. MCL Bus Protocol 2

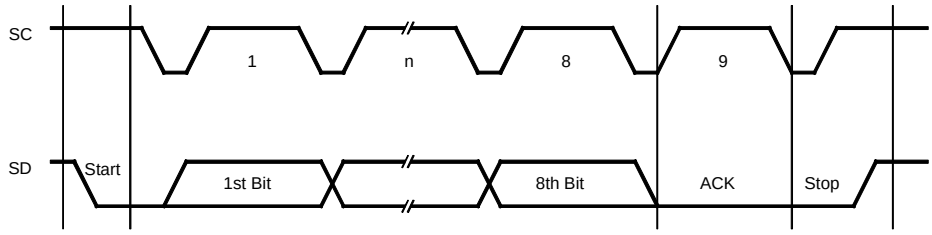

SSI Interrupt

The SSI interrupt INT3 can be generated either by an SSI buffer register status (i.e., transmit buffer empty or receive buffer full), the end of SSI data telegram or on the falling edge of the SC/SD pins on Port 4 (see P4CR). SSI interrupt selection is performed by the Interrupt FunctioN control bit (IFN). The SSI interrupt is usually used to synchronize the software control of the SSI and inform the controller of the present SSI status. The Port 4 interrupts can be used together with the SSI or, if the SSI itself is not required, as additional external interrupt sources. In either case this interrupt is capable of waking the controller out of sleep mode.

To enable and select the SSI relevant interrupts use the SSI interrupt mask (SIM) and the Interrupt Function (IFN) while the Port 4 interrupts are enabled by setting appropriate control bits in P4CR register.

Modulation and Demodulation

If the shift register is used together with Timer 2 or Timer 3 for modulation or demodulation purposes, the 8-bit synchronous mode must be used. In this case, the unused Port 4 pins can be used as conventional bi-directional ports.

The modulation and demodulation stages, if enabled, operate as soon as the SSI is activated (SIR = 0) and cease when deactivated (SIR = 1).

Due to the byte-orientated data control, the SSI (when running normally) generates serial bit streams which are submultiples of 8 bits. An SSI output masking (OMSK) function permits; however, the generation of bit streams of any length. The OMSK signal is derived indirectly from the 4-bit prescaler of the Timer 2 and masks out a programmable number of unrequired trailing data bits during the shifting out of the final data word in the bit stream. The number of non-masked data bits is defined by the value pre-programmed in the prescaler compare register. To use output masking, the modulator stop mode bit (MSM) must be set to "0" before programming the final data word into the SSI transmit buffer. This in turn, enables shift clocks to the prescaler when this final word is shifted out. On reaching the compare value, the prescaler triggers the OMSK signal and all following data bits are blanked.

Figure 72. SSI Output Masking Function

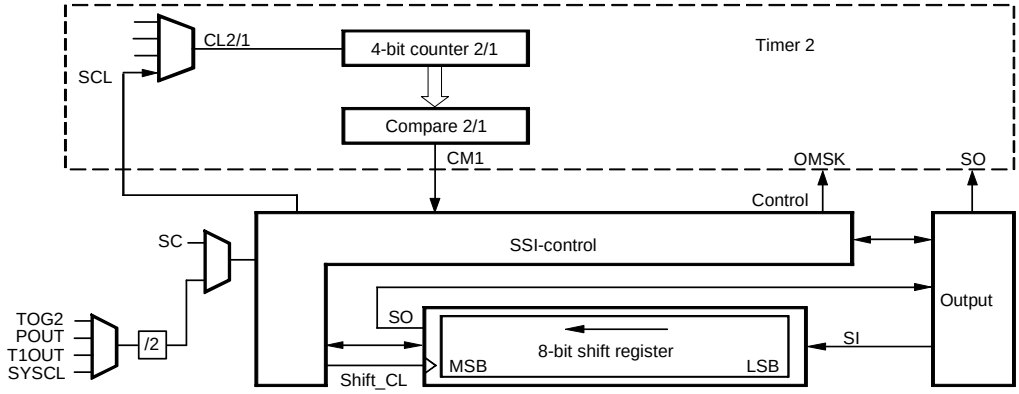

Serial Interface Registers

Serial Interface Control Register 1 (SIC1)

Auxiliary register address: "9"hex

Bit 3	Bit 2	Bit 1	Bit 0
SIR	**SCD**	**SCS1**	**SCS0**

Reset value: 1111b

SIR **S**erial **I**nterface **R**eset
SIR = 1, SSI inactive
SIR = 0, SSI active

SCD **S**erial **C**lock **D**irection
SCD = 1, SC line used as output
SCD = 0, SC line used as input

Note: This bit has to be set to "1" during the MCL mode and the Timer 3 mode 10 or 11

SCS1 **S**erial **C**lock source **S**elect bit **1**

SCS0 **S**erial **C**lock source **S**elect bit **0**

Note: with SCD = 0 the bits SCS1 and SCS0 are insignificant

SCS1	SCS0	Internal Clock for SSI
1	1	SYSCL/2
1	0	T1OUT/2
0	1	POUT/2
0	0	TOG2/2

- In Transmit mode (SDD = 1) shifting starts only if the transmit buffer has been loaded (SRDY = 1).
- Setting SIR-bit loads the contents of the shift register into the receive buffer (synchronous 8-bit mode only).
- In MCL modes, writing a 0 to SIR generates a start condition and writing a 1 generates a stop condition.

Serial Interface Control Register 2 (SIC2)

Auxiliary register address: "A"hex

Bit 3	Bit 2	Bit 1	Bit 0
MSM	**SM1**	**SM0**	**SDD**

Reset value: 1111b

MSM **M**odular **S**top **M**ode
MSM = 1, modulator stop mode disabled (output masking off)
MSM = 0, modulator stop mode enabled (output masking on) - used in modulation modes for generating bit streams which are not sub–multiples of 8 bits.

SM1 **S**erial **M**ode control bit **1**

SM0 **S**erial **M**ode control bit **0**

Mode	SM1	SM0	SSI Mode
1	1	1	8-bit NRZ-Data changes with the rising edge of SC
2	1	0	8-bit NRZ-Data changes with the falling edge of SC
3	0	1	9-bit two-wire MCL mode
4	0	0	8-bit two-wire MCL mode (no acknowledge)

SDD **S**erial **D**ata **D**irection
SDD = 1, transmit mode – SD line used as output (transmit data). SRDY is set by a transmit buffer write access.
SDD = 0, receive mode – SD line used as input (receive data). SRDY is set by a receive buffer read access

Note: SDD controls port directional control and defines the reset function for the SRDY-flag

Serial Interface Status and Control Register (SISC)

Primary register address: "A"hex

	Bit 3	Bit 2	Bit 1	Bit 0	
Write	**MCL**	**RACK**	**SIM**	**IFN**	**Reset value: 1111b**
Read	**- - -**	**TACK**	**ACT**	**SRDY**	**Reset value: xxxxb**

MCL **M**ulti-**C**hip **L**ink activation
MCL = 1,multi-chip link disabled. **This bit has to be set to "0" during transactions to/from the internal EEPROM**
MCL = 0, connects SC and SD additionally to the internal multi-chip link pads

RACK **R**eceive **ACK**nowledge status/control bit for MCL mode
RACK = 0, transmit acknowledge in next receive telegram
RACK = 1, transmit no acknowledge in last receive telegram

TACK **T**ransmit **ACK**nowledge status/control bit for MCL mode
TACK = 0, acknowledge received in last transmit telegram
TACK = 1, no acknowledge received in last transmit telegram

SIM **S**erial **I**nterrupt **M**ask
SIM = 1, disable interrupts
SIM = 0, enable serial interrupt. An interrupt is generated.

IFN **I**nterrupt **F**u**N**ction
IFN = 1, the serial interrupt is generated at the end of telegram
IFN = 0, the serial interrupt is generated when the SRDY goes low (i.e., buffer becomes empty/full in transmit/receive mode)

SRDY **S**erial interface buffer **R**ea**DY** status flag
SRDY = 1, in receive mode: receive buffer empty
in transmit mode: transmit buffer full
SRDY = 0, in receive mode: receive buffer full
in transmit mode: transmit buffer empty

ACT Transmission **ACT**ive status flag
ACT = 1, transmission is active, i.e., serial data transfer. Stop or start conditions are currently in progress.
ACT = 0, transmission is inactive

Serial Transmit Buffer (STB) – Byte Write

Primary register address: "9"hex

First write cycle	**Bit 3**	**Bit 2**	**Bit 1**	**Bit 0**	**Reset value: xxxxb**
Second write cycle	**Bit 7**	**Bit 6**	**Bit 5**	**Bit 4**	**Reset value: xxxxb**

The STB is the transmit buffer of the SSI. The SSI transfers the transmit buffer into the shift register and starts shifting with the most significant bit.

Serial Receive Buffer (SRB) – Byte Read

Primary register address: "9"hex

First read cycle	**Bit 7**	**Bit 6**	**Bit 5**	**Bit 4**	**Reset value: xxxxb**
Second read cycle	**Bit 3**	**Bit 2**	**Bit 1**	**Bit 0**	**Reset value: xxxxb**

The SRB is the receive buffer of the SSI. The shift register clocks serial data in (most significant bit first) and loads content into the receive buffer when complete telegram has been received.

Combination Modes

The UTCM consists of two timers (Timer 2 and Timer 3) and a serial interface. There is a multitude of modes in which the timers and serial interface can work together.

The 8-bit wide serial interface operates as shift register for modulation and demodulation. The modulator and demodulator units work together with the timers and shift the data bits into or out of the shift register.

Combination Mode Timer 2 and SSI

Figure 73. Combination Timer 2 and SSI

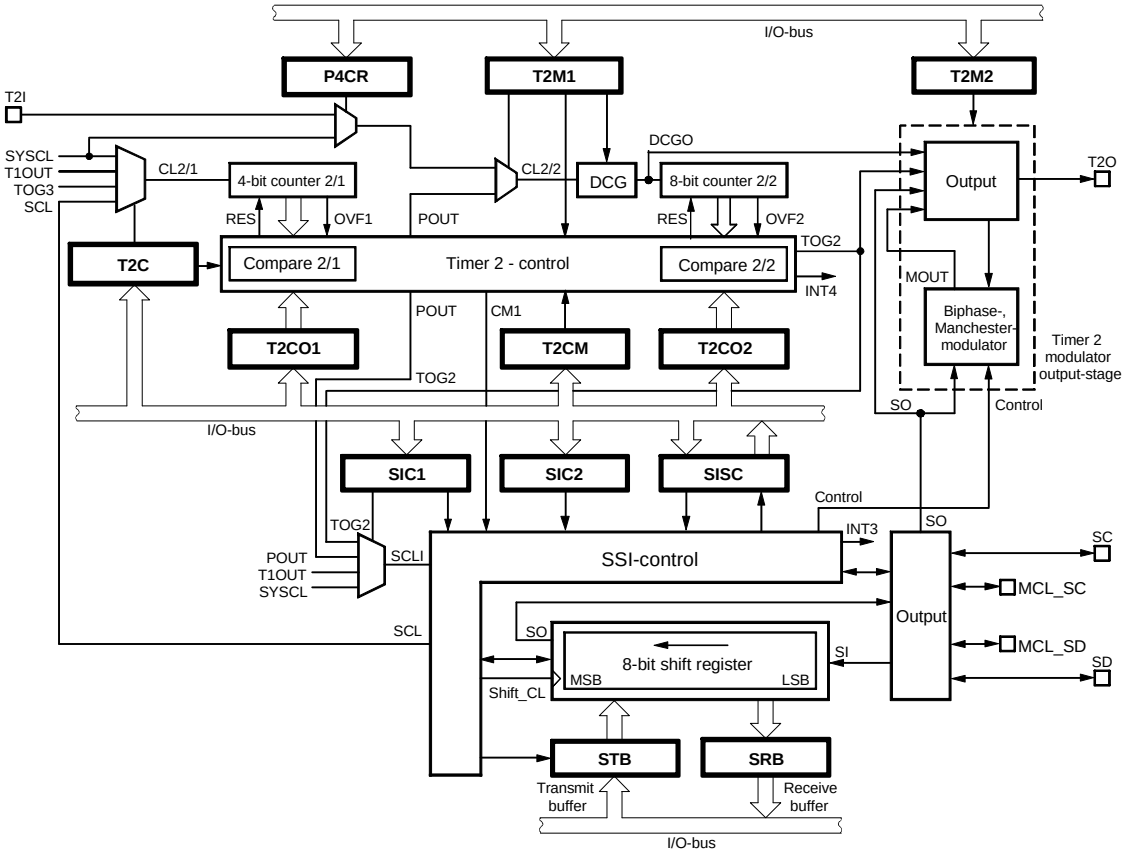

Combination Mode 1: Burst Modulation

SSI mode 1:	8-bit NRZ and internal data SO output to the Timer 2 modulator stage
Timer 2 mode 1, 2, 3 or 4:	8-bit compare counter with 4-bit programmable prescaler and DCG
Timer 2 output mode 3:	Duty cycle burst generator

Figure 74. Carrier Frequency Burst Modulation with the SSI Internal Data Output

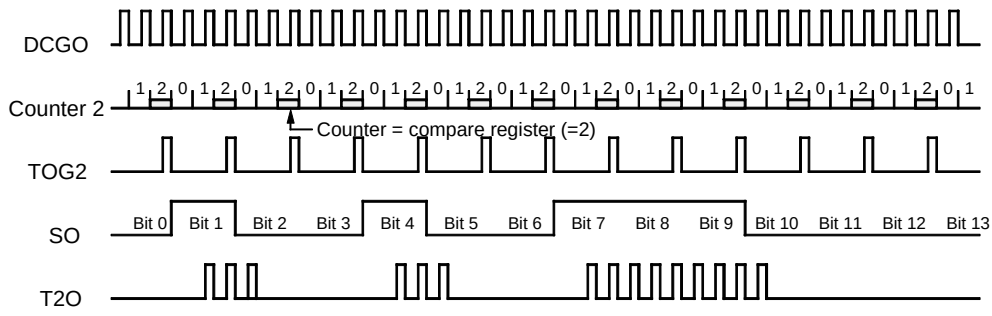

Combination Mode 2: Biphase Modulation 1

SSI mode 1:	8-bit shift register internal data output (SO) to the Timer 2 modulator stage
Timer 2 mode 1, 2, 3 or 4:	8-bit compare counter with 4-bit programmable prescaler
Timer 2 output mode 4:	The modulator 2 of Timer 2 modulates the SSI internal data output to Biphase code

Figure 75. Biphase Modulation 1

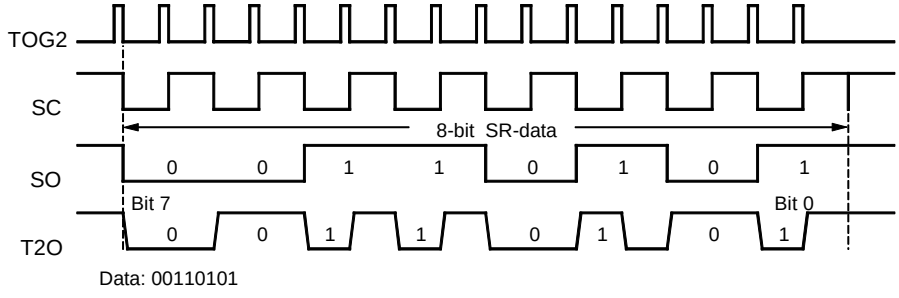

Combination Mode 3: Manchester Modulation 1

SSI mode 1:	8-bit shift register internal data output (SO) to the Timer 2 modulator stage
Timer 2 mode 1, 2, 3 or 4:	8-bit compare counter with 4-bit programmable prescaler
Timer 2 output mode 5:	The modulator 2 of Timer 2 modulates the SSI internal data output to Manchester code

Figure 76. Manchester Modulation 1

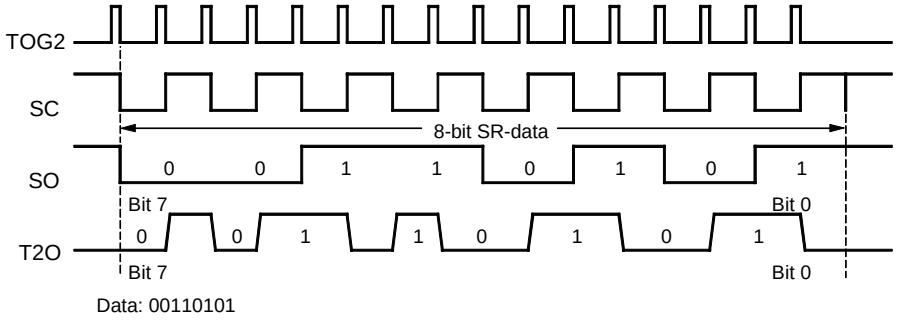

Combination Mode 4: Manchester Modulation 2

SSI mode 1:	8-bit shift register internal data output (SO) to the Timer 2 modulator stage
Timer 2 mode 3:	8-bit compare counter and 4-bit prescaler
Timer 2 output mode 5:	The modulator 2 of Timer 2 modulates the SSI data output to Manchester code

The 4-bit stage can be used as prescaler for the SSI to generate the stop signal for modulator 2. The SSI has a special mode to supply the prescaler with the shift clock. The control output signal (OMSK) of the SSI is used as stop signal for the modulator. Figure 72 shows an example for a 12-bit Manchester telegram.

Figure 77. Manchester Modulation 2

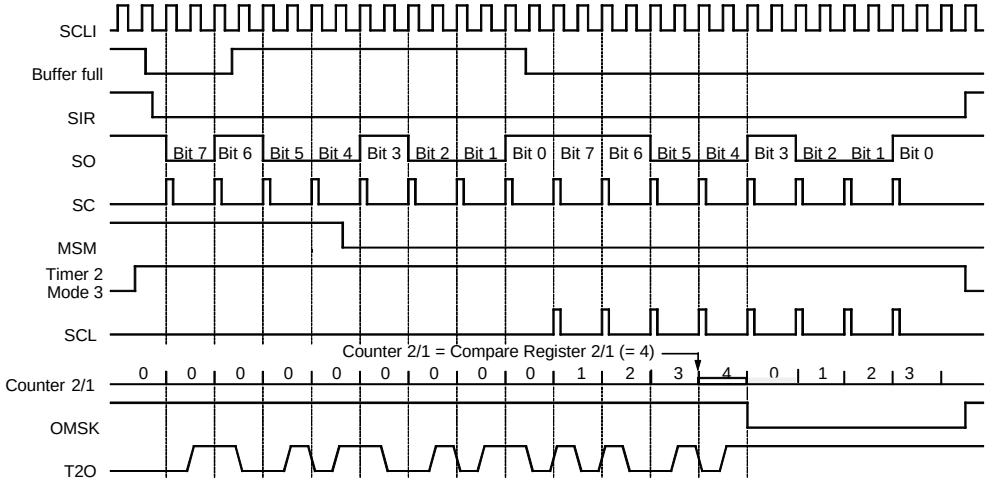

Combination Mode 5: Biphase Modulation 2

SSI mode 1:	8-bit shift register internal data output (SO) to the Timer 2 modulator stage
Timer 2 mode 3:	8-bit compare counter and 4-bit prescaler
Timer 2 output mode 4:	The modulator 2 of Timer 2 modulates the SSI data output to Biphase code

The 4-bit stage can be used as prescaler for the SSI to generate the stop signal for modulator 2. The SSI has a special mode to supply the prescaler via the shift clock. The control output signal (OMSK) of the SSI is used as stop signal for the modulator. Figure 73 shows an example for a 13-bit Biphase telegram.

Figure 78. Biphase Modulation 2

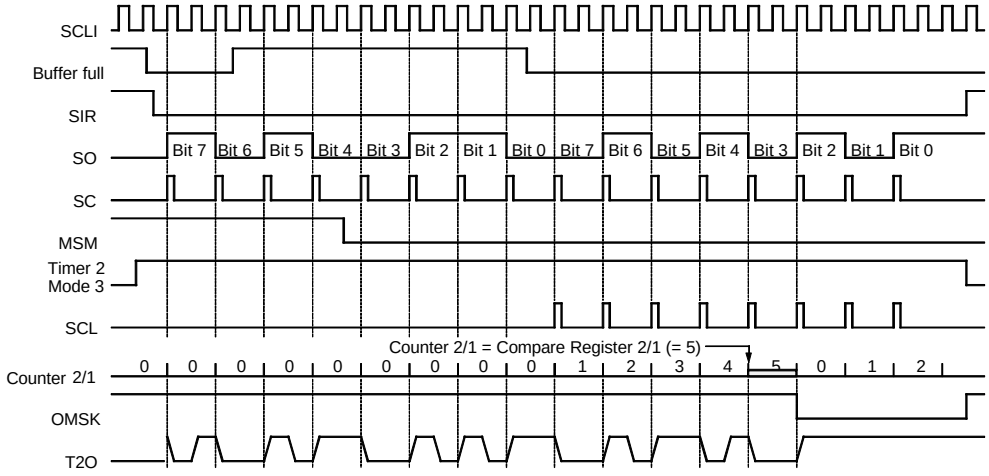

Combination Mode Timer 3 and SSI

Figure 79. Combination Timer 3 and SSI

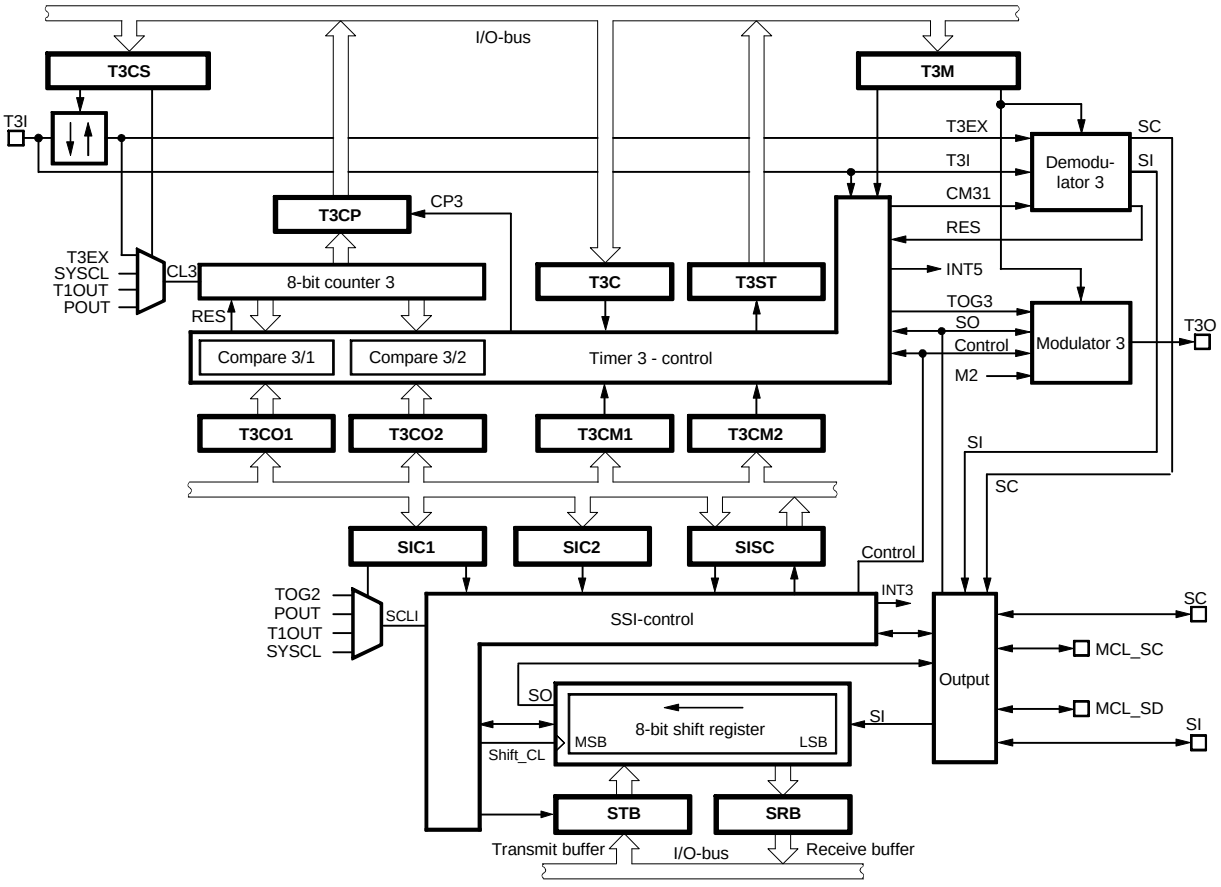

Combination Mode 6: FSK Modulation

SSI mode 1: 8-bit shift register internal data output (SO) to the Timer 3

Timer 3 mode 8: FSK modulation with shift register data (SO)

The two compare registers are used to generate two varied time intervals. The SSI data output selects which compare register is used for the output frequency generation. A "0" level at the SSI data output enables the compare register 1 and a "1" level enables the compare register 2. The compare and compare mode registers must be programmed to generate the two frequencies via the output toggle flip-lop. The SSI can be supplied with the toggle signal of Timer 2 or any other clock source. The Timer 3 counter is driven by an internal or external clock source.

Figure 80. FSK Modulation

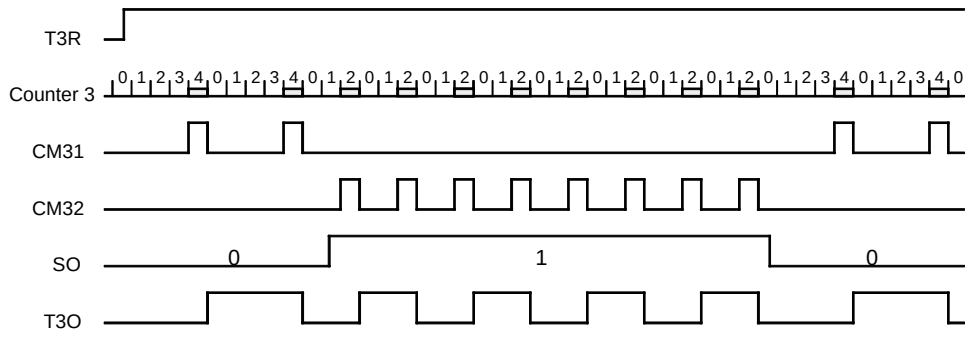

Combination Mode 7: Pulse-width Modulation (PWM)

SSI mode 1: 8-bit shift register internal data output (SO) to the Timer 3

Timer 3 mode 9: Pulse-width modulation with the shift register data (SO)

The two compare registers are used to generate two varied time intervals. The SSI data output selects which compare register is used for the output pulse generation. In this mode, both compare and compare mode registers must be programmed to generate the two pulse width. It is also useful to enable the single-action mode for extreme duty cycles. Timer 2 is used as baudrate generator and for the triggered restart of Timer 3. The SSI must be supplied with the toggle signal of Timer 2. The counter is driven by an internal or external clock source.

Figure 81. Pulse-width Modulation

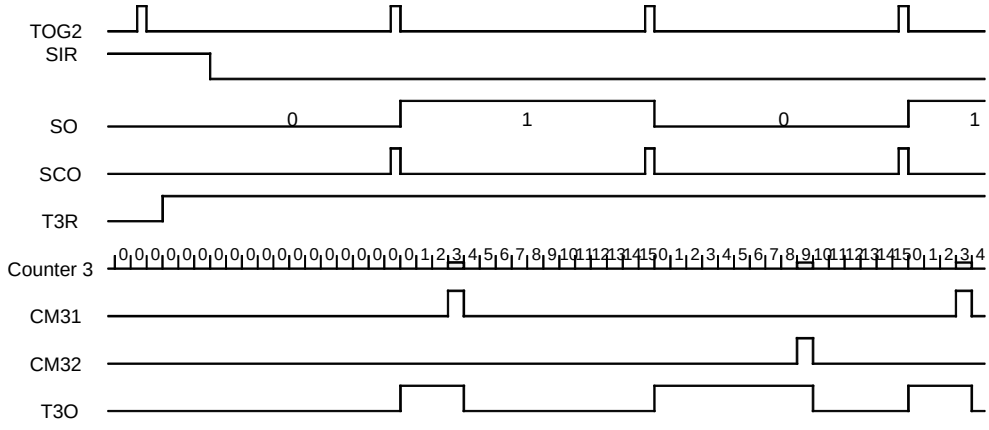

Combination Mode 8: Manchester Demodulation/Pulse-width Demodulation

SSI mode 1: 8-bit shift register internal data input (SI) and the internal shift clock (SCI) from the Timer 3

Timer 3 mode 10: Manchester demodulation/pulse-width demodulation with Timer 3

For Manchester demodulation, the edge detection stage must be programmed to detect each edge at the input. These edges are evaluated by the demodulator stage. The timer stage is used to generate the shift clock for the SSI. A compare register 1 match event defines the correct moment for shifting the state from the input T3I as the decoded bit into shift register. After that, the demodulator waits for the next edge to synchronize the timer by a reset for the next bit. The compare register 2 can be used to detect a time error and handle it with an interrupt routine.

Before activating the demodulator mode the timer and the demodulator stage must be synchronized with the bitstream. The Manchester code timing consists of parts with the half bitlength and the complete bitlength. A synchronization routine must start the demodulator after an interval with the complete bitlength.

The counter can be driven by any internal clock source. The output T3O can be used by Timer 2 in this mode. The Manchester decoder can also be used for pulse-width demodulation. The input must programmed to detect the positive edge. The demodulator and timer must be synchronized with the leading edge of the pulse. After that a counter match with the compare register 1 shifts the state at the input T3I into the shift register. The next positive edge at the input restarts the timer.

Figure 82. Manchester Demodulation

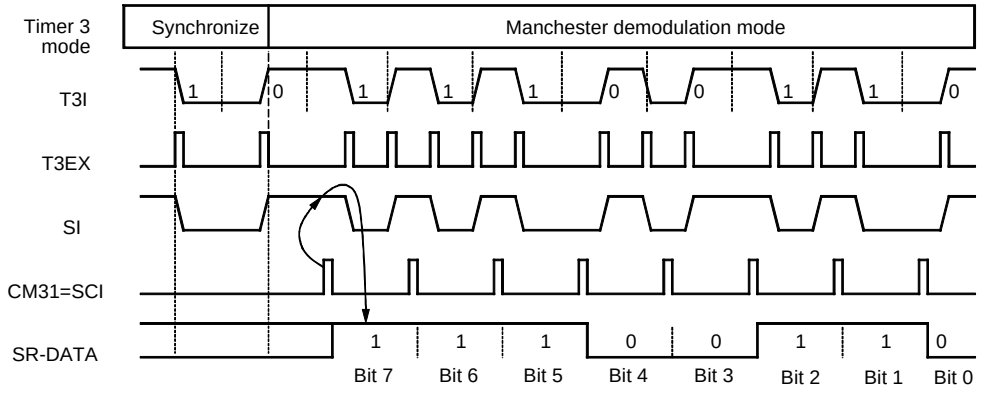

Combination Mode 9: Biphase Demodulation

SSI mode 1: 8-bit shift register internal data input (SI) and the internal shift clock (SCI) from the Timer 3

Timer 3 mode 11: Biphase demodulation with Timer 3

In the Biphase demodulation mode the timer works like in the Manchester demodulation mode. The difference is that the bits are decoded with the toggle flip-flop. This flip-flop samples the edge in the middle of the bitframe and the compare register 1 match event shifts the toggle flip-flop output into shift register. Before activating the demodulation the timer and the demodulation stage must be synchronized with the bitstream. The Biphase code timing consists of parts with the half bitlength and the complete bitlength. The synchronization routine must start the demodulator after an interval with the complete bitlength.

The counter can be driven by any internal clock source and the output T3O can be used by Timer 2 in this mode.

Figure 83. Biphase Demodulation

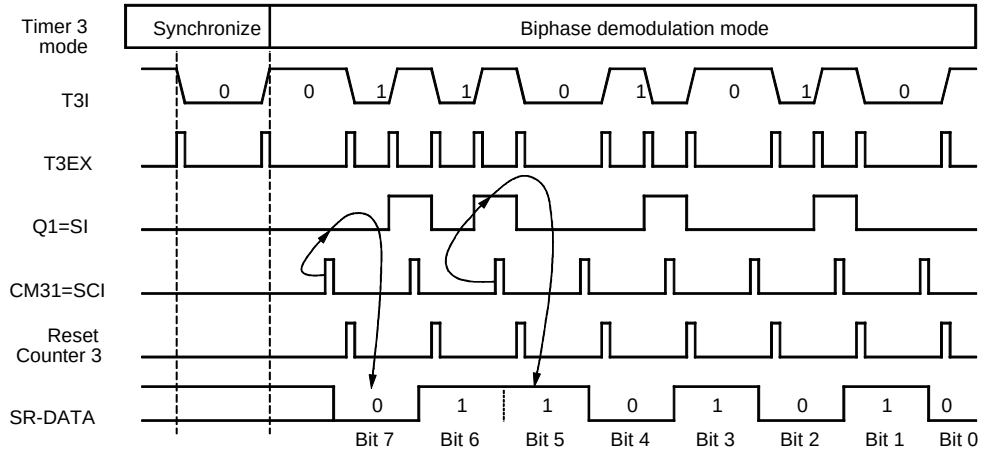

Combination Mode Timer 2 and Timer 3

Figure 84. Combination Timer 3 and Timer 2

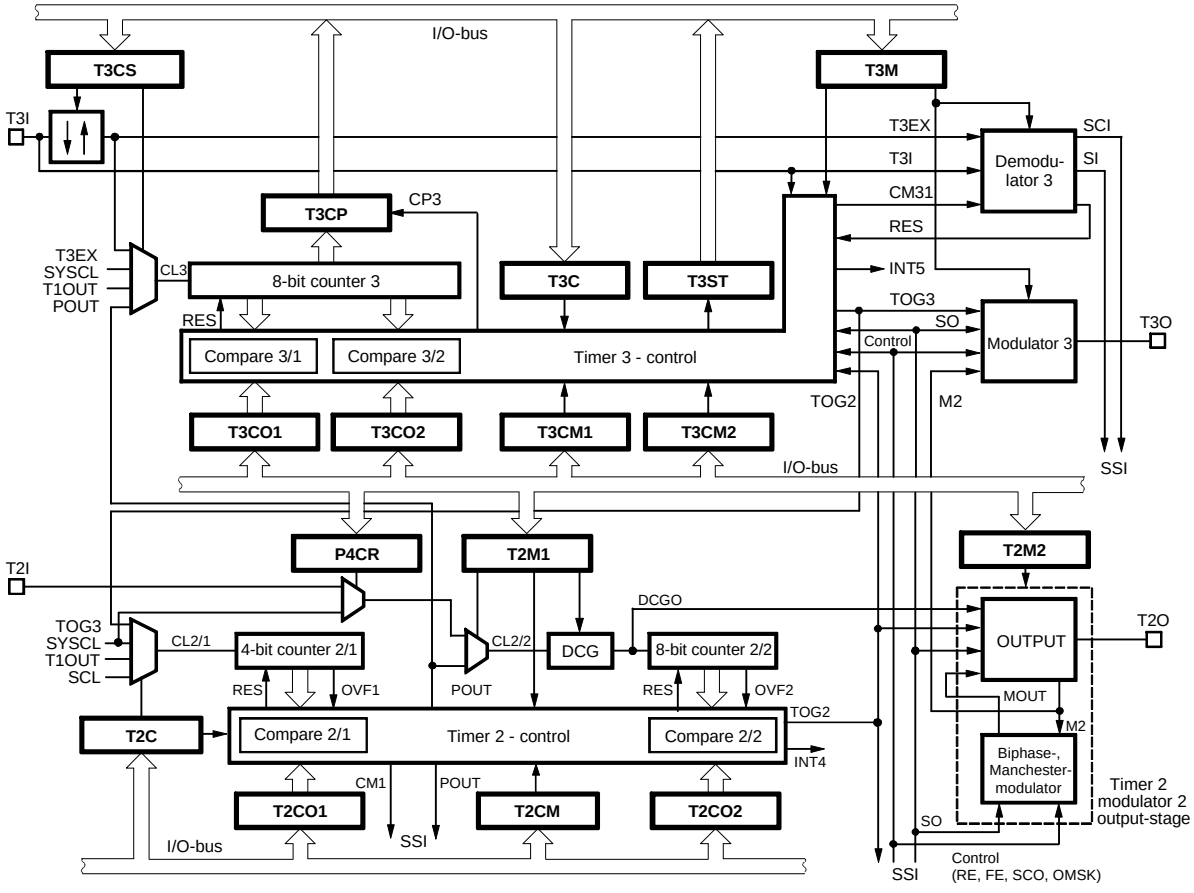

Combination Mode 10: Frequency Measurement or Event Counter with Time Gate

Timer 2 mode 1/2:	12-bit compare counter/8-bit compare counter and 4-bit prescaler
Timer 2 output mode 1/6:	Timer 2 compare match toggles (TOG2) to the Timer 3
Timer 3 mode 3: (with Timer 2	Timer/Counter; internal trigger restart and internal capture TOG2-signal)

The counter is driven by an external (T3I) clock source. The output signal (TOG2) of Timer 2 resets the counter. The counter value before reset is saved in the capture register. If single-action mode is activated for one or both compare registers, the trigger signal restarts also the single actions. This mode can be used for frequency measurements or as event counter with time gate.

Figure 85. Frequency Measurement

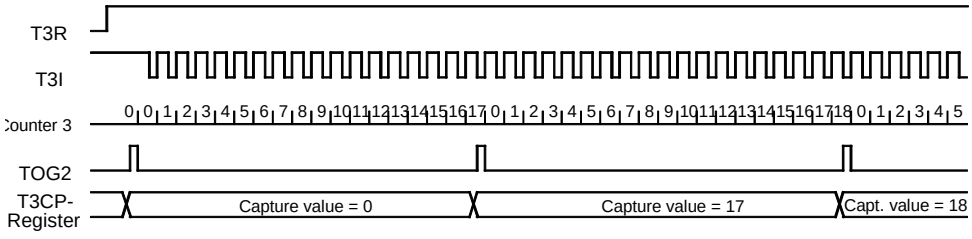

Figure 86. Event Counter with Time Gate

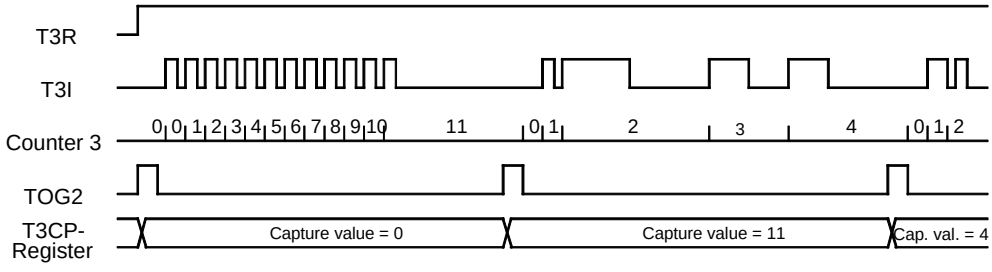

Combination Mode 11: Burst Modulation 1

Timer 2 mode 1/2:	12-bit compare counter/8-bit compare counter and 4-bit prescaler
Timer 2 output mode 1/6:	Timer 2 compare match toggles the output flip-flop (M2) to the Timer 3
Timer 3 mode 6:	Carrier frequency burst modulation controlled by Timer 2 output (M2)

The Timer 3 counter is driven by an internal or external clock source. Its compare and compare mode registers must be programmed to generate the carrier frequency with the output toggle flip-flop. The output toggle flip-flop (M2) of Timer 2 is used to enable and disable the Timer 3 output. The Timer 2 can be driven by the toggle output signal of Timer 3 (TOG3) or any other clock source.

Figure 87. Burst Modulation 1

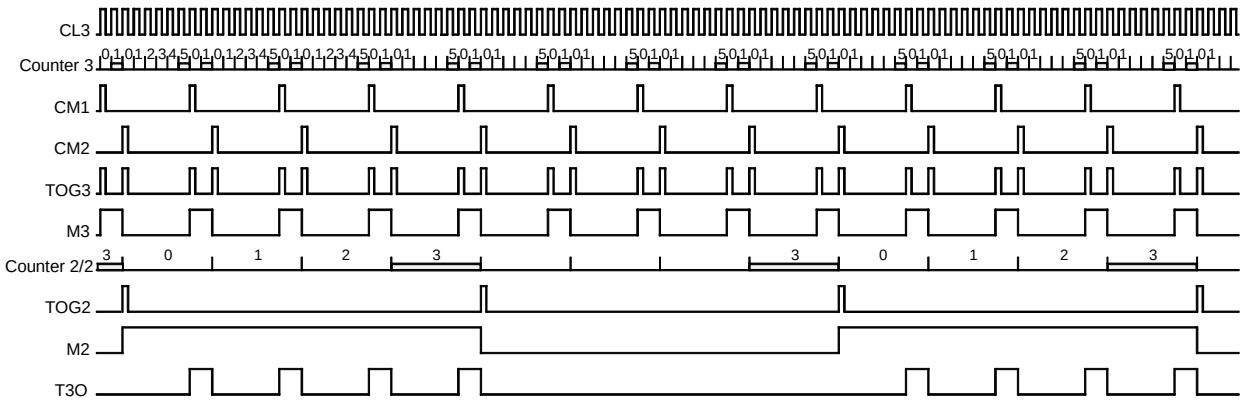

Combination Mode Timer 2, Timer 3 and SSI

Figure 88. Combination Timer 2, Timer 3 and SSI

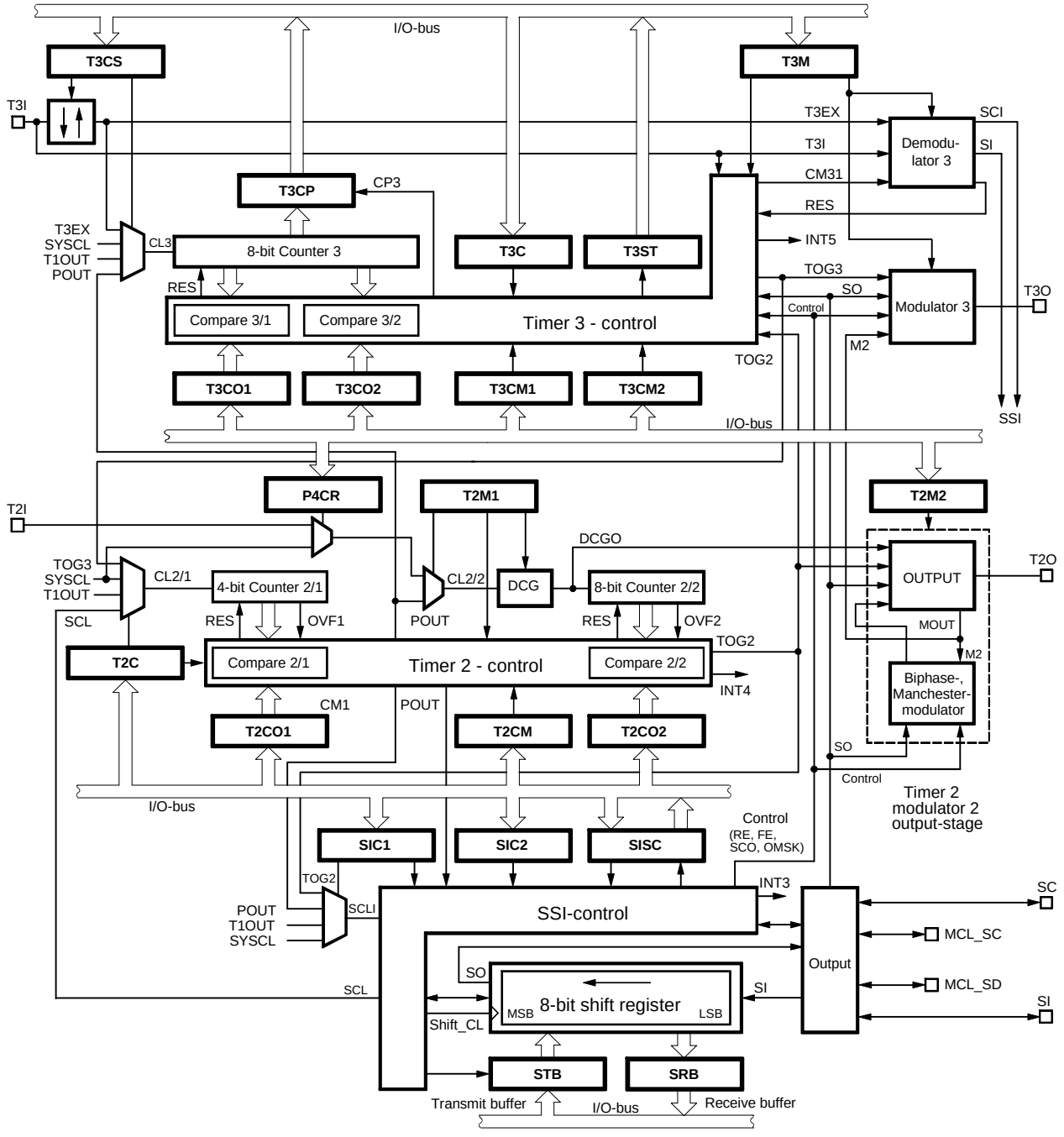

Combination Mode 12: Burst Modulation 2

SSI mode 1:	8-bit shift register internal data output (SO) to the Timer 3
Timer 2 output mode 2:	8-bit compare counter and 4-bit prescaler
Timer 2 output mode 1/6:	Timer 2 compare match toggles (TOG2) to the SSI
Timer 3 mode 7:	Carrier frequency burst modulation controlled by the internal output (SO) of SSI

The Timer 3 counter is driven by an internal or external clock source. Its compare- and compare mode registers must be programmed to generate the carrier frequency with the output toggle flip-flop (M3). The internal data output (SO) of the SSI is used to enable and disable the Timer 3 output. The SSI can be supplied with the toggle signal of Timer 2.

Figure 89. Burst Modulation 2

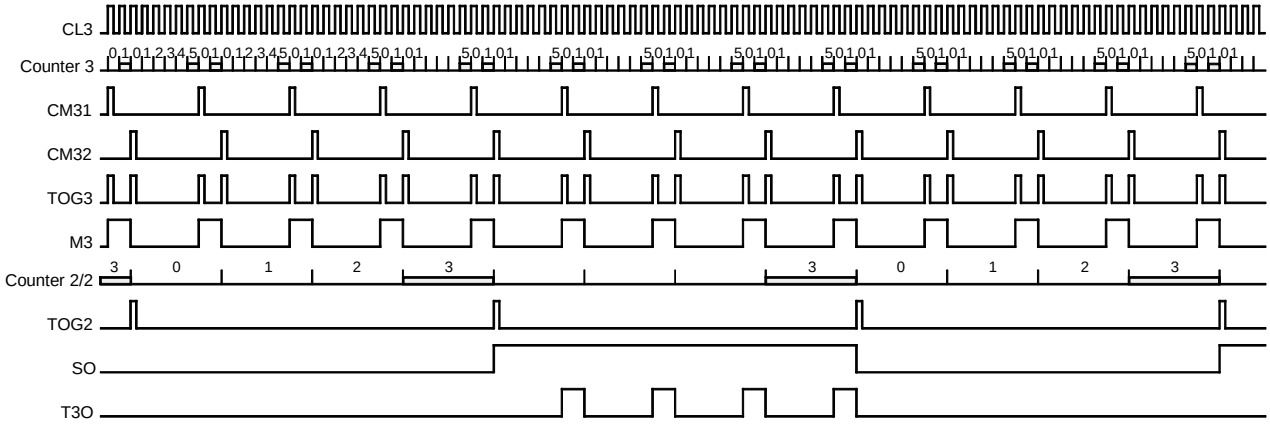

Combination Mode 13: FSK Modulation

SSI mode 1:	8-bit shift register internal data output (SO) to the Timer 3
Timer 2 output mode 3:	8-bit compare counter and 4-bit prescaler
Timer 2 output mode 1/6:	Timer 2 4-bit compare match signal (POUT) to the SSI
Timer 3 mode 8:	FSK modulation with shift register data output (SO)

The two compare registers are used to generate two different time intervals. The SSI data output selects which compare register is used for the output frequency generation. A "0" level at the SSI data output enables the compare register 1 and a "1" level enables the compare register 2. The compare- and compare mode registers must be programmed to generate the two frequencies via the output toggle flip-flop. The SSI can be supplied with the toggle signal of Timer 2 or any other clock source. The Timer 3 counter is driven by an internal or external clock source.

Figure 90. FSK Modulation

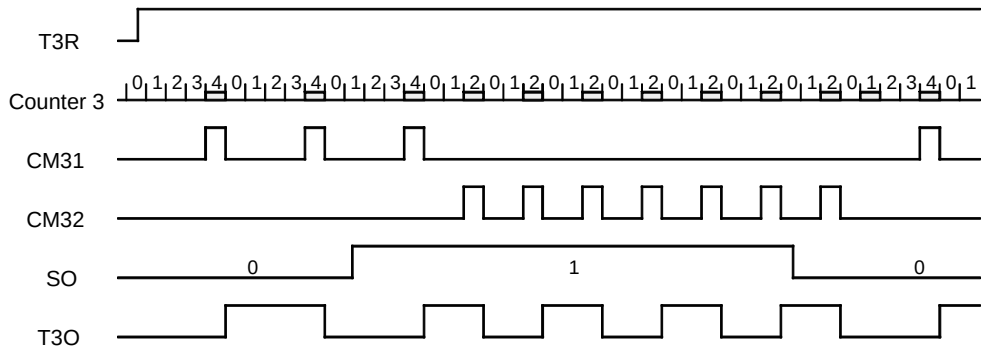

Data EEPROM

The internal data EEPROM offers 2 pages of 512 bits each. Both pages are organized as 32 × 16-bit words. The programming voltage as well as the write cycle timing is generated on chip. To be compatible with the ROM parts, two restrictions have to be taken into account:

- To use the same EEPROM page as with the ROM parts the application software has to write the MCL-command “09h” to the EEPROM. This command has no effect for the microcontroller if it is left inside the HEX-file for the ROM version.
- Data handling for read and write is performed using the serial interface MCL.

The page select is performed by either writing “01h” (page 1) or “09h” (page 0) to the EEPROM.

Figure 91. Data EEPROM

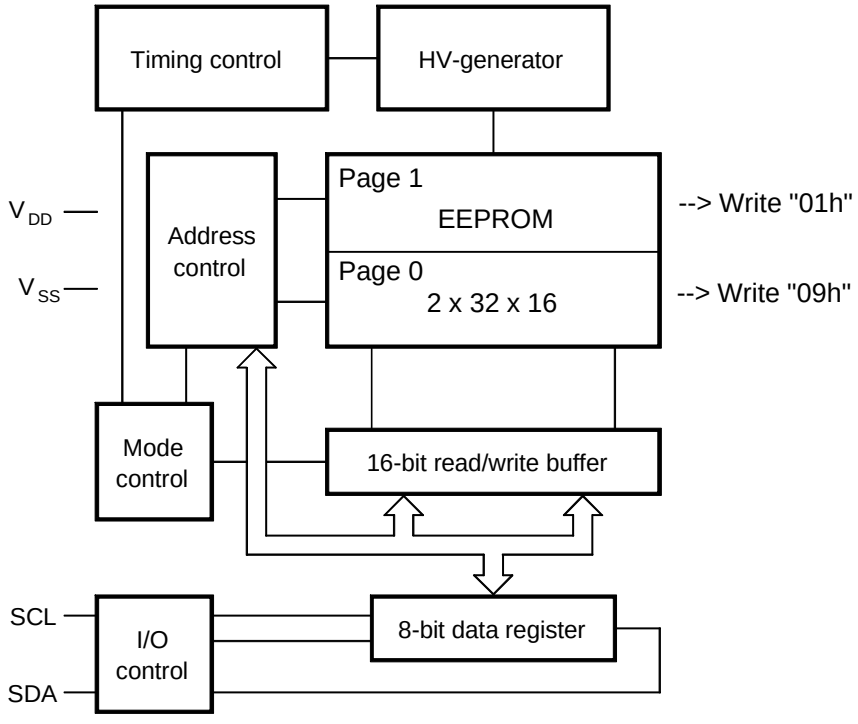

Serial Interface

The EEPROM uses a two-wire serial interface (TWI) to the microcontroller for read and write accesses to the data. It is considered to be a slave in all these applications. That means, the controller has to be the master that initiates the data transfer and provides the clock for transmit and receive operations.

The serial interface is controlled by the microcontroller which generates the serial clock and controls the access via the SCL-line and SDA-line. SCL is used to clock the data into and out of the device. SDA is a bi-directional line that is used to transfer data into and out of the device. The following protocol is used for the data transfers.

Serial Protocol

- Data states on the SDA-line changing only while SCL is low.
- Changes on the SDA-line while SCL is high are interpreted as START or STOP condition.
- A START condition is defined as high to low transition on the SDA-line while the SCL-line is high.
- A STOP condition is defined as low to high transition on the SDA-line while the SCL-line is high.
- Each data transfer must be initialized with a START condition and terminated with a STOP condition. The START condition wakes the device from standby mode and the STOP condition returns the device to standby mode.
- A receiving device generates an acknowledge (A) after the reception of each byte. This requires an additional clock pulse, generated by the master. If the reception was successful the receiving master or slave device pulls down the SDA-line during that clock cycle. If an acknowledge is not detected (N) by the interface in transmit mode, it will terminate further data transmissions and go into receive mode. A master device must finish its read operation by a non-acknowledge and then send a stop condition to bring the device into a known state.

Figure 92. MCL Protocol

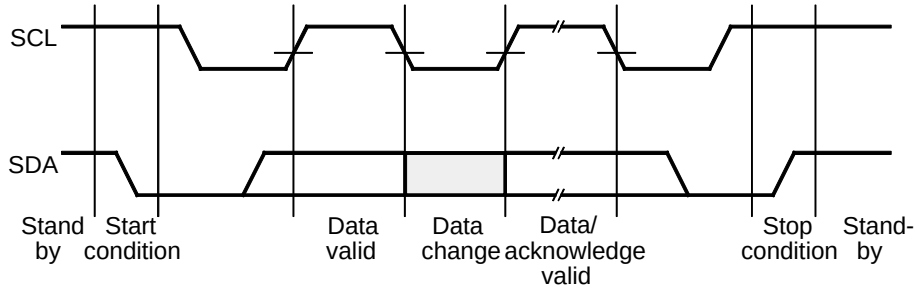

- Before the START condition and after the STOP condition the device is in standby mode and the SDA line is switched as input with pull-up resistor.
- The control byte that follows the START condition determines the following operation. It consists of the 5-bit row address, 2 mode control bits and the READ/NWRITE bit that is used to control the direction of the following transfer. A "0" defines a write access and a "1" a read access.

Control Byte Format

	EEPROM Address					Mode Control Bits		Read/ NWrite	
Start	A4	A3	A2	A1	A0	C1	C0	R/NW	Ackn

Start	Control byte	Ackn	Data byte	Ackn	Data byte	Ackn	Stop

EEPROM

The EEPROM has a size of 2 × 512 bits and is organized as 32 x 16-bit matrix each. To read and write data to and from the EEPROM the serial interface must be used. The interface supports one and two byte write accesses and one to n-byte read accesses to the EEPROM.

EEPROM – Operating Modes

The operating modes of the EEPROM are defined via the control byte. The control byte contains the row address, the mode control bits and the read/not-write bit that is used to control the direction of the following transfer. A "0" defines a write access and a "1" a read access. The five address bits select one of the 32 rows of the EEPROM memory to be accessed. For all accesses the complete 16-bit word of the selected row is loaded into a buffer. The buffer must be read or overwritten via the serial interface. The two mode control bits C1 and C2 define in which order the accesses to the buffer are performed: High byte – low byte or low byte – high byte. The EEPROM also supports autoincrement and autodecrement read operations. After sending the start address with the corresponding mode, consecutive memory cells can be read row by row without transmission of the row addresses.

Two special control bytes enable the complete initialization of EEPROM with "0" or with "1".

Write Operations

The EEPROM permits 8-bit and 16-bit write operations. A write access starts with the START condition followed by a write control byte and one or two data bytes from the master. It is completed via the STOP condition from the master after the acknowledge cycle.

The programming cycle consists of an erase cycle (write "zeros") and the write cycle (write "ones"). Both cycles together take about 10 ms.

Acknowledge Polling

If the EEPROM is busy with an internal write cycle, all inputs are disabled and the EEPROM will not acknowledge until the write cycle is finished. This can be used to detect the end of the write cycle. The master must perform acknowledge polling by sending a start condition followed by the control byte. If the device is still busy with the write cycle, it will not return an acknowledge and the master has to generate a stop condition or perform further acknowledge polling sequences. If the cycle is complete, it returns an acknowledge and the master can proceed with the next read or write cycle.

Write One Data Byte

Start	Control byte	A	Data byte 1	A	Stop

Write Two Data Bytes

Start	Control byte	A	Data byte 1	A	Data byte 2	A	Stop

Write Control Byte Only

Start	Control byte	A	Stop

Write Control Bytes

	MSB							LSB
Write low byte first	A4	A3	A2	A1	A0	C1	C0	R/NW
	Row address					0	1	0

Byte order	LB(R)	HB(R)

	MSB							LSB
Write high byte first	A4	A3	A2	A1	A0	C1	C0	R/NW
	Row address					1	0	0

Byte order	HB(R)	LB(R)

A -> acknowledge; HB: high byte; LB: low byte; R: row address

Read Operations

The EEPROM allows byte-, word- and current address read operations. The read operations are initiated in the same way as write operations. Every read access is initiated by sending the START condition followed by the control byte which contains the address and the read mode. When the device has received a read command, it returns an acknowledge, loads the addressed word into the read/write buffer and sends the selected data byte to the master. The master has to acknowledge the received byte if it wants to proceed the read operation. If two bytes are read out from the buffer the device increments respectively decrements the word address automatically and loads the buffer with the next word. The read mode bits determines if the low or high byte is read first from the buffer and if the word address is incremented or decremented for the next read access. If the memory address limit is reached, the data word address will roll over and the sequential read will continue. The master can terminate the read operation after every byte by not responding with an acknowledge (N) and by issuing a stop condition.

Read One Data Byte

Start	Control byte	A	Data byte 1	N	Stop

Read Two Data Bytes

Start	Control byte	A	Data byte 1	A	Data byte 2	N	Stop

Read n Data Bytes

Start	Control byte	A	Data byte 1	A	Data byte 2	A	- - -	Data byte n	N	Stop

Read Control Bytes

	MSB							LSB
Read low byte first, address increment	A4	A3	A2	A1	A0	C1	C0	R/NW
	Row address					0	1	1

Byte order	LB(R)	HB(R)	LB(R+1)	HB(R+1)	- - -	LB(R+n)	HB(R+n)

MSB LSB

Read high byte first, address decrement	A4	A3	A2	A1	A0	C1	C0	R/NW
	Row address					1	0	1

Byte order	HB(R)	LB(R)	HB(R-1)	LB(R-1)	- - -	HB(R-n)	LB(R-n)

A -> acknowledge, N -> no acknowledge; HB: high byte; LB: low byte, R: row address

Initialization the Serial Interface to the EEPROM

To prevent unexpected behavior of he EEPROM and its interface it is good practice to use an initialization sequence after any reset of the circuit. This is performed by writing:

Start	"FFh"	A	Stop

to the serial interface. If the EEPROM acknowledges this sequence it is in a defined state. Maybe it is necessary to perform this sequence twice.

Absolute Maximum Ratings

Voltages are given relative to V_{SS}

Parameters	Symbol	Value	Unit
Supply voltage	V_{DD}	-0.3 to + 6.5	V
Input voltage (on any pin)	V_{IN}	V_{SS} -0.3 ≤ V_{IN} ≤ V_{DD} +0.3	V
Output short circuit duration	t_{short}	Indefinite	s
Operating temperature range	T_{amb}	-40 to +125	°C
Storage temperature range	T_{stg}	-40 to +150	°C
Soldering temperature (t ≤ 10 s)	T_{sld}	260	°C

Note: Stresses greater than those listed under absolute maximum ratings may cause permanent damage to the device. This is a stress rating only and functional operation of the device at any condition above those indicated in the operational section of this specification is not implied. Exposure to absolute maximum rating condition for an extended period may affect device reliability. All inputs and outputs are protected against high electrostatic voltages or electric fields. However, precautions to minimize the build-up of electrostatic charges during handling are recommended. Reliability of operation is enhanced if unused inputs are connected to an appropriate logic voltage level (e.g., V_{DD}).

Thermal Resistance

Parameter	Symbol	Value	Unit
Thermal resistance (SSO20)	R_{thJA}	140	K/W

DC Operating Characteristics

V_{SS} = 0 V, T_{amb} = -40°C to +125°C unless otherwise specified.

Parameters	Test Conditions	Symbol	Min.	Typ.	Max.	Unit
Power Supply			2.0		4.0	V
Operating voltage at V_{DD}		V_{DD}	V_{POR}			V
Active current CPU active	f_{SYSCL} = 1 MHz V_{DD} = 1.8 V V_{DD} = 3.0 V	I_{DD}		0.3 0.4	 0.4	mA mA
Power down current (CPU sleep, RC oscillator active, 4-MHz quartz oscillator active)	f_{SYSCL} = 1 MHz V_{DD} = 1.8 V V_{DD} = 3.0 V	I_{PD}		40 70	 150	µA µA
Sleep current (CPU sleep, 32-kHz quartz oscillator active 4-MHz quartz oscillator inactive)	V_{DD} = 1.8 V V_{DD} = 3.0 V V_{DD} = 3.0 V at 85°C	I_{Sleep}		0.4 0.6	 4.3 1.5	µA µA µA
Sleep current (CPU sleep, 32-kHz quartz oscillator inactive 4-MHz quartz oscillator inactive)	V_{DD} = 3.0 V V_{DD} = 3.0 V at 85°C	I_{Sleep}		0.3	3.5 1.0	µA µA
Pin capacitance	Any pin to V_{SS}	C_L		7	10	pF

DC Operating Characteristics (Continued)

V_{SS} = 0 V, T_{amb} = -40°C to +125°C unless otherwise specified.

Parameters	Test Conditions	Symbol	Min.	Typ.	Max.	Unit
Power-on Reset Threshold Voltage						
POR threshold voltage	BOT = 1	V_{POR}	1.54	1.7	1.88	V
POR threshold voltage	BOT = 0	V_{POR}	1.83	2.0	2.20	V
POR hysteresis		V_{POR}		50		mV
Voltage Monitor Threshold Voltage						
VM high threshold voltage	V_{DD} > VM, VMS = 1	V_{MThh}		3.0	3.35	V
VM high threshold voltage	V_{DD} < VM, VMS = 0	V_{MThh}	2.77	3.0		V
VM middle threshold voltage	V_{DD} > VM, VMS = 1	V_{MThm}		2.6	2.9	V
VM middle threshold voltage	V_{DD} < VM, VMS = 0	V_{MThm}	2.4	2.6		V
VM low threshold voltage	V_{DD} > VM, VMS = 1	V_{MThl}		2.2	2.44	V
VM low threshold voltage	V_{DD} < VM, VMS = 0	V_{MThl}	2.0	2.2		V
External Input Voltage						
VMI	V_{DD} = 3 V, VMS = 1	V_{VMI}		1.3	1.44	V
VMI	V_{DD} = 3 V, VMS = 0	V_{VMI}	1.18	1.3		V
All Bi-directional Ports						
Input voltage LOW	V_{DD} = 2.0 to 4.0 V	V_{IL}	V_{SS}		0.2 × V_{DD}	V
Input voltage HIGH	V_{DD} = 2.0 to 4.0 V	V_{IH}	0.8 × V_{DD}		V_{DD}	V
Input LOW current (switched pull-up)	V_{DD} = 2.0 V, V_{DD} = 3.0 V, V_{IL}= V_{SS}	I_{IL}	-3 -10	-8 -20	-14 -40	µA µA
Input HIGH current (switched pull-down)	V_{DD} = 2.0 V, V_{DD} = 3.0 V, V_{IH} = V_{DD}	I_{IH}	3 10	6 20	14 40	µA µA
Input LOW current (static pull-up)	V_{DD} = 2.0 V V_{DD} = 3.0 V, V_{IL}= V_{SS}	I_{IL}	-30 -80	-50 -160	-98 -320	µA µA
Input LOW current (static pull-down)	V_{DD} = 2.0 V V_{DD} = 3.0 V, V_{IH}= V_{DD}	I_{IH}	20 80	50 160	100 320	µA µA
Input leakage current	V_{IL} = V_{SS}	I_{IL}			100	nA
Input leakage current	V_{IH} = V_{DD}	I_{IH}			100	nA
Output LOW current	V_{OL} = 0.2 × V_{DD} V_{DD} = 2.0 V V_{DD} = 3.0 V	I_{OL}	0.9 3	1.8 5	3.6 8	mA mA
Output HIGH current	V_{OH} = 0.8 × V_{DD} V_{DD} = 2.0 V V_{DD} = 3.0 V	I_{OH}	-0.8 -3	-1.7 -5	-3.4 -8	mA mA

Note: The Pin BP20/NTE has a static pull-up resistor during the reset-phase of the microcontroller

AC Characteristics

Supply voltage V_{DD} = 2.0 to 4.0 V, V_{SS} = 0 V, T_{amb} = 25°C unless otherwise specified.

Parameters	Test Conditions	Symbol	Min.	Typ.	Max.	Unit
Operation Cycle Time						
System clock cycle	V_{DD} = 2.0 to 4.0 V T_{amb} = -40 to 85°C	t_{SYSCL}	500		2000	ns
	V_{DD} = 2.4 to 4.0 V T_{amb} = -40 to 85°C	t_{SYSCL}	250		2000	ns
Timer 2 input Timing Pin T2I						
Timer 2 input clock		f_{T2I}			5	MHz
Timer 2 input LOW time	Rise/fall time < 10 ns	t_{T2IL}	100			ns
Timer 2 input HIGH time	Rise/fall time < 10 ns	t_{T2IH}	100			ns
Timer 3 Input Timing Pin T3I						
Timer 3 input clock		f_{T3I}			SYSCL/2	MHz
Timer 3 input LOW time	Rise/fall time < 10 ns	t_{T3IL}	2 t_{SYSCL}			ns
Timer 3 input HIGH time	Rise/fall time < 10 ns	t_{T3IH}	2 t_{SYSCL}			ns
Interrupt Request Input Timing						
Interrupt request LOW time	Rise/fall time < 10 ns	t_{IRL}	100			ns
Interrupt request HIGH time	Rise/fall time < 10 ns	t_{IRH}	100			ns
External System Clock						
EXSCL at OSC1, ECM = EN	Rise/fall time < 10 ns	f_{EXSCL}	0.5		4	MHz
EXSCL at OSC1, ECM = DI	Rise/fall time < 10 ns	f_{EXSCL}	0.02		4	MHz
Input HIGH time	Rise/fall time < 10 ns	t_{IH}	0.1			µs
Reset Timing						
Power-on reset time	$V_{DD} > V_{POR}$	t_{POR}		1.5	5	ms
RC Oscillator 1						
Frequency		f_{RcOut1}		3.8		MHz
Stability	V_{DD} = 2.0 to 4.0 V T_{amb} = -40 to +125°C	$\Delta f/f$			±50	%
RC Oscillator 2 – External Resistor						
Frequency	R_{ext} = 180 kΩ	f_{RcOut2}		4		MHz
Stability	V_{DD} = 2.0 to 4.0 V T_{amb} = -40 to +125°C	$\Delta f/f$			±15	%
Stabilization time		t_S			10	µs
4-MHz Crystal Oscillator (Operating Range V_{DD} = 2.2 V to 4.0 V)						
Frequency		f_X		4		MHz
Start-up time		t_{SQ}		5		ms
Stability		$\Delta f/f$	-10		10	ppm
Integrated input/output capacitances (configurable)	C_{IN}/C_{OUT} programmable	C_{IN} C_{OUT}	0, 2, 5, 7, 10 or 12 0, 2, 5, 7, 10 or 12			pF pF

AC Characteristics (Continued)

Supply voltage V_{DD} = 2.0 to 4.0 V, V_{SS} = 0 V, T_{amb} = 25°C unless otherwise specified.

Parameters	Test Conditions	Symbol	Min.	Typ.	Max.	Unit
32-kHz Crystal Oscillator (Operating Range V_{DD} = 2.0 V to 4.0 V)						
Frequency		f_X		32.768		kHz
Start-up time		t_{SQ}		0.5		s
Stability		$\Delta f/f$	-10		10	ppm
Integrated input/output capacitances (configurable)	C_{IN}/C_{OUT} programmable	C_{IN} C_{OUT}	0, 2, 5, 7, 10 or 12 0, 2, 5, 7, 10 or 12			pF pF
External 32-kHz Crystal Parameters						
Crystal frequency		f_X		32.768		kHz
Serial resistance		RS		30	50	kΩ
Static capacitance		C0		1.5		pF
Dynamic capacitance		C1		3		fF
External 4-MHz Crystal Parameters						
Crystal frequency		f_X		4.0		MHz
Serial resistance		RS		40	150	W
Static capacitance		C0		1.4	3	pF
Dynamic capacitance		C1		3		fF
EEPROM						
Operating current during erase/write cycle		I_{WR}		600	1300	µA
Endurance	Erase-/write cycles T_{amb} = 125°C	E_D E_D	500,000 10,000	1,000,000 20,000		Cycles Cycles
Data erase/write cycle time	For 16-bit access	t_{DEW}		9	13	ms
Data retention time	 T_{amb} = 125°C	t_{DR} t_{DR}	100 1			years years
Power-up to read operation		t_{PUR}			0.2	ms
Power-up to write operation		t_{PUW}			0.2	ms
Program EEPROM	Erase-/write cycles, T_{amb} = 0 to 40°C	n_{EW}	100	1,000		Cycles
Serial Interface						
SCL clock frequency		f_{SC_MCL}		100	500	kHz

Crystal Characteristics

Figure 93. Crystal Equivalent Circuit

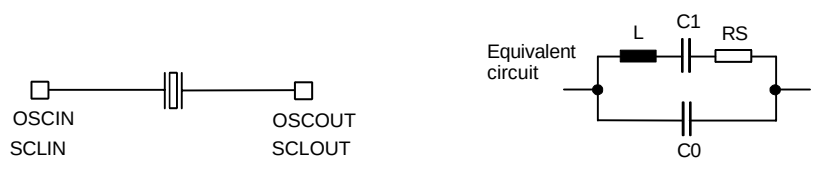

Ordering Information

Please select the option settings from the list below and insert ROM CRC.

	Output	Input
Port 1		
BP10	[ ] CMOS [ ] Open drain [N] [ ] Open drain [P]	[ ] Switched pull-up [ ] Switched pull-down [ ] Static pull-up [ ] Static pull-down
BP13	[ ] CMOS [ ] Open drain [N] [ ] Open drain [P]	[ ] Switched pull-up [ ] Switched pull-down [ ] Static pull-up [ ] Static pull-down
Port 2		
BP20	[ ] CMOS [ ] Open drain [N] [ ] Open drain [P]	[ ] Switched pull-up [ ] Switched pull-down [ ] Static pull-up
BP21	[ ] CMOS [ ] Open drain [N] [ ] Open drain [P]	[ ] Switched pull-up [ ] Switched pull-down [ ] Static pull-up [ ] Static pull-down
BP22	[ ] CMOS [ ] Open drain [N] [ ] Open drain [P]	[ ] Switched pull-up [ ] Switched pull-down [ ] Static pull-up [ ] Static pull-down
BP23	[ ] CMOS [ ] Open drain [N] [ ] Open drain [P]	[ ] Switched pull-up [ ] Switched pull-down [ ] Static pull-up [ ] Static pull-down
Port 4		
BP40	[ ] CMOS [ ] Open drain [N] [ ] Open drain [P]	[ ] Switched pull-up [ ] Switched pull-down [ ] Static pull-up [ ] Static pull-down
BP41	[ ] CMOS [ ] Open drain [N] [ ] Open drain [P]	[ ] Switched pull-up [ ] Switched pull-down [ ] Static pull-up [ ] Static pull-down
BP42	[ ] CMOS [ ] Open drain [N] [ ] Open drain [P]	[ ] Switched pull-up [ ] Switched pull-down [ ] Static pull-up [ ] Static pull-down
BP43	[ ] CMOS [ ] Open drain [N] [ ] Open drain [P]	[ ] Switched pull-up [ ] Switched pull-down [ ] Static pull-up [ ] Static pull-down

	Output	Input
Port 5		
BP50	[ ] CMOS [ ] Open drain [N] [ ] Open drain [P]	[ ] Switched pull-up [ ] Switched pull-down [ ] Static pull-up [ ] Static pull-down
BP51	[ ] CMOS [ ] Open drain [N] [ ] Open drain [P]	[ ] Switched pull-up [ ] Switched pull-down [ ] Static pull-up [ ] Static pull-down
BP52	[ ] CMOS [ ] Open drain [N] [ ] Open drain [P]	[ ] Switched pull-up [ ] Switched pull-down [ ] Static pull-up [ ] Static pull-down
BP53	[ ] CMOS [ ] Open drain [N] [ ] Open drain [P]	[ ] Switched pull-up [ ] Switched pull-down [ ] Static pull-up [ ] Static pull-down
Port 6		
BP60	[ ] CMOS [ ] Open drain [N] [ ] Open drain [P]	[ ] Switched pull-up [ ] Switched pull-down [ ] Static pull-up [ ] Static pull-down
BP63	[ ] CMOS [ ] Open drain [N] [ ] Open drain [P]	[ ] Switched pull-up [ ] Switched pull-down [ ] Static pull-up [ ] Static pull-down

OSC1	
	[ ] No integrated capacitance
	[ ] Internal capacitance (0 to 20 pF) [_____pF]
OSC2	
	[ ] No integrated capacitance
	[ ] Internal capacitance (0 to 20 pF) [_____pF]

Clock Used	
	[ ] External resistor
	[ ] External clock
	[ ] 32-kHz crystal
	[ ] 4-MHz crystal

ECM (External Clock Monitor)	
	[ ] Enable
	[ ] Disable

File: _____ . HEX

CRC: _____ . HEX

Approval Date: _____

Signature: _____

Extended Type Number	Package	Remarks
T48C862M-R3-TNQ	SSO24	429 MHz to 439 MHz

Package Information

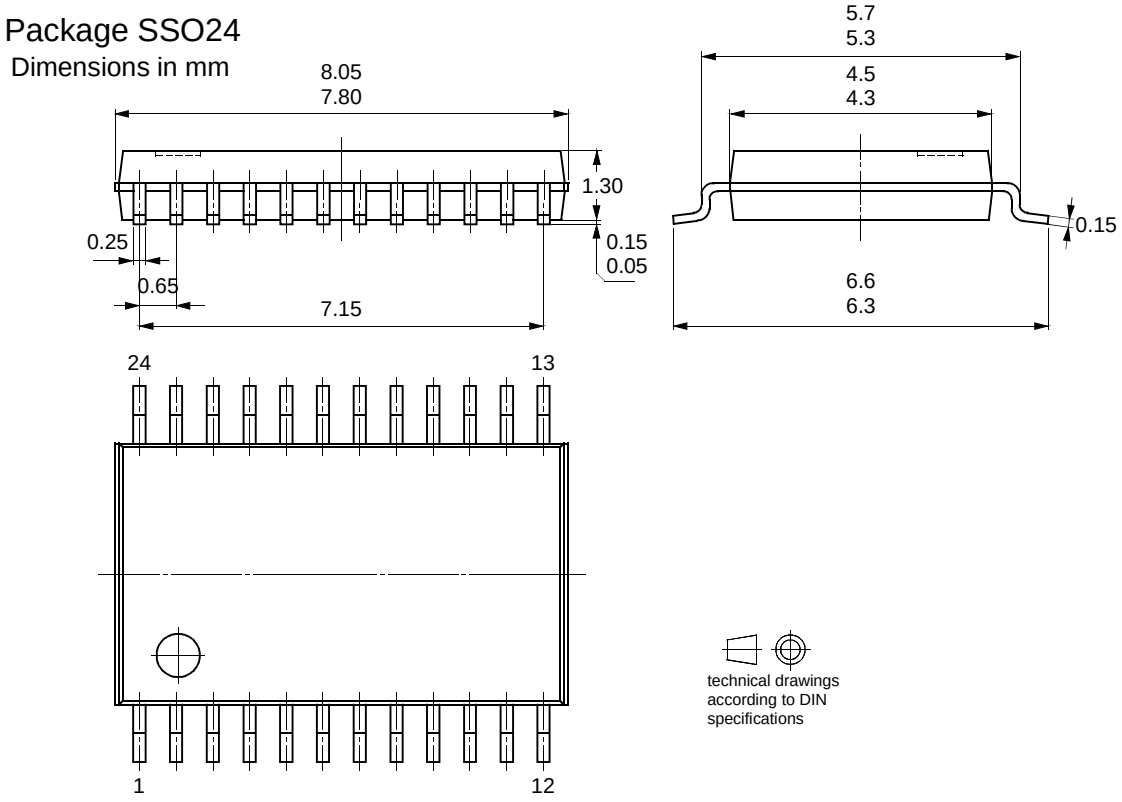

Table of Contents

Features ***1***

Description ***1***

Pin Configuration ***2***

Pin Description: RF Part ***2***

Pin Description: Microcontroller Part ***3***

UHF ASK/FSK Transmitter Block ***4***

Features ***4***

Description ***4***

General Description ***6***

Functional Description ***6***

ASK Transmission 6
FSK Transmission 6
CLK Output 7
Clock Pulse Take Over 7
Output Matching and Power Setting 7
Application Circuit 8

Absolute Maximum Ratings ***11***

Thermal Resistance ***11***

Electrical Characteristics ***11***

Microcontroller Block ***13***

Features ***13***

Description ***13***

Introduction ***13***

Differences between T48C862-R3 and ATAR862 Microcontrollers 13
Program Memory 13
Configuration Memory 13
Data Memory 13
Reset Function 14

Microcontroller Architecture General Description ***14***

Components of Microcontroller Core 14
Program Memory 14
RAM 15
Expression Stack 15
Return Stack 15
Registers 16
Program Counter (PC) 16
RAM Address Registers 17
Expression Stack Pointer (SP) 17
Return Stack Pointer (RP) 17
RAM Address Registers (X and Y) 17
Top of Stack (TOS) 17
Condition Code Register (CCR) 17
Carry/Borrow (C) 17
Branch (B) 17
Interrupt Enable (I) 17
ALU 18
I/O Bus 18
Instruction Set 18
Interrupt Structure 18
Interrupt Processing 19
Interrupt Latency 19
Software Interrupts 20
Hardware Interrupts 20

Master Reset 21
Power-on Reset and Brown-out Detection 21
Watchdog Reset 22
External Clock Supervisor 22

Voltage Monitor 22
Voltage Monitor Control/Status Register 23

Clock Generation 24
Clock Module 24
Oscillator Circuits and External Clock Input Stage 25
RC-oscillator 1 Fully Integrated 25
External Input Clock 26
RC-oscillator 2 with External Trimming Resistor 26
4-MHz Oscillator 27
32-kHz Oscillator 27
Clock Management 28
Clock Management Register (CM) 28
System Configuration Register (SC) 29

Power-down Modes 29

Peripheral Modules 30
Addressing Peripherals 30

Bi-directional Ports 33
Bi-directional Port 1 33
Bi-directional Port 2 34
Port 2 Data Register (P2DAT) 35
Port 2 Control Register (P2CR) 35
Bi-directional Port 5 35
Port 5 Data Register (P5DAT) 36
Port 5 Control Register (P5CR) Byte Write 36
Bi-directional Port 4 37
Port 4 Data Register (P4DAT) 38
Port 4 Control Register (P4CR) Byte Write 38
Bi-directional Port 6 38
Port 6 Data Register (P6DAT) 39
Port 6 Control Register (P6CR) 39
Universal Timer/Counter/ Communication Module (UTCM) 39
Timer 1 40
Timer 1 Control Register 1 (T1C1) 42
Timer 1 Control Register 2 (T1C2) 43
Watchdog Control Register (WDC) 43
Timer 2 44
Timer 2 Modes 45
Mode 1: 12-bit Compare Counter 45
Mode 2: 8-bit Compare Counter with 4-bit Programmable Prescaler 45
Mode 3/4: 8-bit Compare Counter and 4-bit Programmable Prescaler 46
Timer 2 Output Modes 46
Timer 2 Output Signals 47
Timer 2 Output Mode 1 47
Timer 2 Output Mode 2 48
Timer 2 Output Mode 3 48
Timer 2 Output Mode 4 49
Timer 2 Output Mode 5 49
Timer 2 Output Mode 7 49
Timer 2 Registers 50
Timer 2 Control Register (T2C) 50
Timer 2 Mode Register 1 (T2M1) 51
Duty Cycle Generator 51
Timer 2 Mode Register 2 (T2M2) 52
Timer 2 Compare and Compare Mode Registers 53
Timer 2 Compare Mode Register (T2CM) 53
Timer 2 COmpare Register 1 (T2CO1) 53
Timer 2 COmpare Register 2 (T2CO2) Byte Write 54

Timer 3 54

Features 54
Timer/Counter Modes 55
Timer 3 – Mode 1: Timer/Counter 56
Timer 3 – Mode 2: Timer/Counter, External Trigger Restart and External Capture (with T3I Input) 57
Timer 3 – Mode 3: Timer/Counter, Internal Trigger Restart and Internal Capture (with TOG2) 58
Timer 3 – Mode 4: Timer/Counter 58
Timer 3 – Mode 5: Timer/Counter, External Trigger Restart and External Capture (with T3I Input) 58
Timer 3 Modulator/Demodulator Modes 58
Timer 3 – Mode 6: Carrier Frequency Burst Modulation Controlled by Timer 2 Output Toggle Flip-Flop (M2) 58
Timer 3 – Mode 7: Carrier Frequency Burst Modulation Controlled by SSI Internal Output (SO) 58
Timer 3 – Mode 8: FSK Modulation with Shift Register Data (SO) 59
Timer 3 – Mode 9: Pulse-width Modulation with the Shift Register 59
Timer 3 – Mode 10: Manchester Demodulation/Pulse-width Demodulation 59
Timer 3 – Mode 11: Biphase Demodulation 60
Timer 3 – Mode 12: Timer/Counter with External Capture Mode (T3I) 61
Timer 3 Modulator for Carrier Frequency Burst Modulation 61
Timer 3 Demodulator for Biphase, Manchester and Pulse-width-modulated Signals 61
Timer 3 Registers 62
Timer 3 Mode Register (T3M) 62
Timer 3 Control Register 1 (T3C) Write 63
Timer 3 Status Register 1 (T3ST) Read 63
Timer 3 Clock Select Register (T3CS) 63
Timer 3 Compare- and Compare-mode Register 64
Timer 3 Compare-Mode Register 1 (T3CM1) 64
Timer 3 Compare Mode Register 2 (T3CM2) 65
Timer 3 COmpare Register 1 (T3CO1) Byte Write 65
Timer 3 COmpare Register 2 (T3CO2) Byte Write 65
Timer 3 Capture Register 66
Timer 3 CaPture Register (T3CP) Byte Read 66
Synchronous Serial Interface (SSI) 66
SSI Features: 66
SSI Peripheral Configuration 66
General SSI Operation 67
8-bit Synchronous Mode 68
9-bit Shift Mode (MCL) 70
8-bit Pseudo MCL Mode 71
MCL Bus Protocol 72
SSI Interrupt 73
Modulation and Demodulation 73
Serial Interface Registers 74
Serial Interface Control Register 1 (SIC1) 74

Serial Interface Control Register 2 (SIC2) 75
Serial Interface Status and Control Register (SISC) 76
Serial Transmit Buffer (STB) – Byte Write 76
Serial Receive Buffer (SRB) – Byte Read 76

Combination Modes 77
Combination Mode Timer 2 and SSI 77
Combination Mode 1: Burst Modulation 78
Combination Mode 2: Biphase Modulation 1 78
Combination Mode 3: Manchester Modulation 1 79
Combination Mode 4: Manchester Modulation 2 79
Combination Mode 5: Biphase Modulation 2 80
Combination Mode Timer 3 and SSI 81
Combination Mode 6: FSK Modulation 81
Combination Mode 7: Pulse-width Modulation (PWM) 82
Combination Mode 8: Manchester Demodulation/Pulse-width Demodulation 82
Combination Mode 9: Biphase Demodulation 83
Combination Mode Timer 2 and Timer 3 84
Combination Mode 10: Frequency Measurement or Event Counter with Time Gate 85
Combination Mode 11: Burst Modulation 1 85
Combination Mode Timer 2, Timer 3 and SSI 87
Combination Mode 12: Burst Modulation 2 88
Combination Mode 13: FSK Modulation 88
Data EEPROM 89
Serial Interface 90
Serial Protocol 90
Control Byte Format 91
EEPROM 91
EEPROM – Operating Modes 91
Write Operations 91
Acknowledge Polling 91
Write One Data Byte 91
Write Two Data Bytes 91
Write Control Byte Only 91
Write Control Bytes 92
Read Operations 92
Read One Data Byte 92
Read Two Data Bytes 92
Read n Data Bytes 92
Read Control Bytes 92
Initialization the Serial Interface to the EEPROM 93

Absolute Maximum Ratings 94

Thermal Resistance *94*

DC Operating Characteristics *94*

AC Characteristics *96*

Crystal Characteristics *97*

Ordering Information *98*

Package Information *99*

Table of Contents *100*

Atmel Headquarters

Corporate Headquarters
2325 Orchard Parkway
San Jose, CA 95131
TEL 1(408) 441-0311
FAX 1(408) 487-2600

Europe
Atmel Sarl
Route des Arsenaux 41
Case Postale 80
CH-1705 Fribourg
Switzerland
TEL (41) 26-426-5555
FAX (41) 26-426-5500

Asia
Room 1219
Chinachem Golden Plaza
77 Mody Road Tsimhatsui
East Kowloon
Hong Kong
TEL (852) 2721-9778
FAX (852) 2722-1369

Japan
9F, Tonetsu Shinkawa Bldg.
1-24-8 Shinkawa
Chuo-ku, Tokyo 104-0033
Japan
TEL (81) 3-3523-3551
FAX (81) 3-3523-7581

Atmel Operations

Memory
2325 Orchard Parkway
San Jose, CA 95131
TEL 1(408) 441-0311
FAX 1(408) 436-4314

Microcontrollers
2325 Orchard Parkway
San Jose, CA 95131
TEL 1(408) 441-0311
FAX 1(408) 436-4314

La Chantrerie
BP 70602
44306 Nantes Cedex 3, France
TEL (33) 2-40-18-18-18
FAX (33) 2-40-18-19-60

ASIC/ASSP/Smart Cards
Zone Industrielle
13106 Rousset Cedex, France
TEL (33) 4-42-53-60-00
FAX (33) 4-42-53-60-01

1150 East Cheyenne Mtn. Blvd.
Colorado Springs, CO 80906
TEL 1(719) 576-3300
FAX 1(719) 540-1759

Scottish Enterprise Technology Park
Maxwell Building
East Kilbride G75 0QR, Scotland
TEL (44) 1355-803-000
FAX (44) 1355-242-743

RF/Automotive
Theresienstrasse 2
Postfach 3535
74025 Heilbronn, Germany
TEL (49) 71-31-67-0
FAX (49) 71-31-67-2340

1150 East Cheyenne Mtn. Blvd.
Colorado Springs, CO 80906
TEL 1(719) 576-3300
FAX 1(719) 540-1759

Biometrics/Imaging/Hi-Rel MPU/
High Speed Converters/RF Datacom
Avenue de Rochepleine
BP 123
38521 Saint-Egreve Cedex, France
TEL (33) 4-76-58-30-00
FAX (33) 4-76-58-34-80

e-mail
literature@atmel.com

Web Site
http://www.atmel.com

© Atmel Corporation 2003.
Atmel Corporation makes no warranty for the use of its products, other than those expressly contained in the Company's standard warranty which is detailed in Atmel's Terms and Conditions located on the Company's web site. The Company assumes no responsibility for any errors which may appear in this document, reserves the right to change devices or specifications detailed herein at any time without notice, and does not make any commitment to update the information contained herein. No licenses to patents or other intellectual property of Atmel are granted by the Company in connection with the sale of Atmel products, expressly or by implication. Atmel's products are not authorized for use as critical components in life support devices or systems.

Atmel® is the registered trademark of Atmel.

Other terms and product names may be the trademarks of others.

Printed on recycled paper.

4554A–4BMCU–02/03 xM